偉興鐵業工程有限公司
WAI HING IRON WORKS LTD

PRODUCT CATALOGUE
2026 EDITION

PROPRIETARY PRODUCTS CATALOGUE

專有產品目錄

STANDARD RANGES + MADE TO YOUR SPECIFICATION

01 GULLY GRATINGS & COVERS
02 DRAINAGE SYSTEMS
03 METAL GRATINGS
04 BOLLARDS & BARRIERS
05 FLOOD PROTECTION
06 FENCING & SITE SAFETY
07 TRAFFIC & CAR PARK
08 ARCHITECTURAL
09 BUILDING PRODUCTS

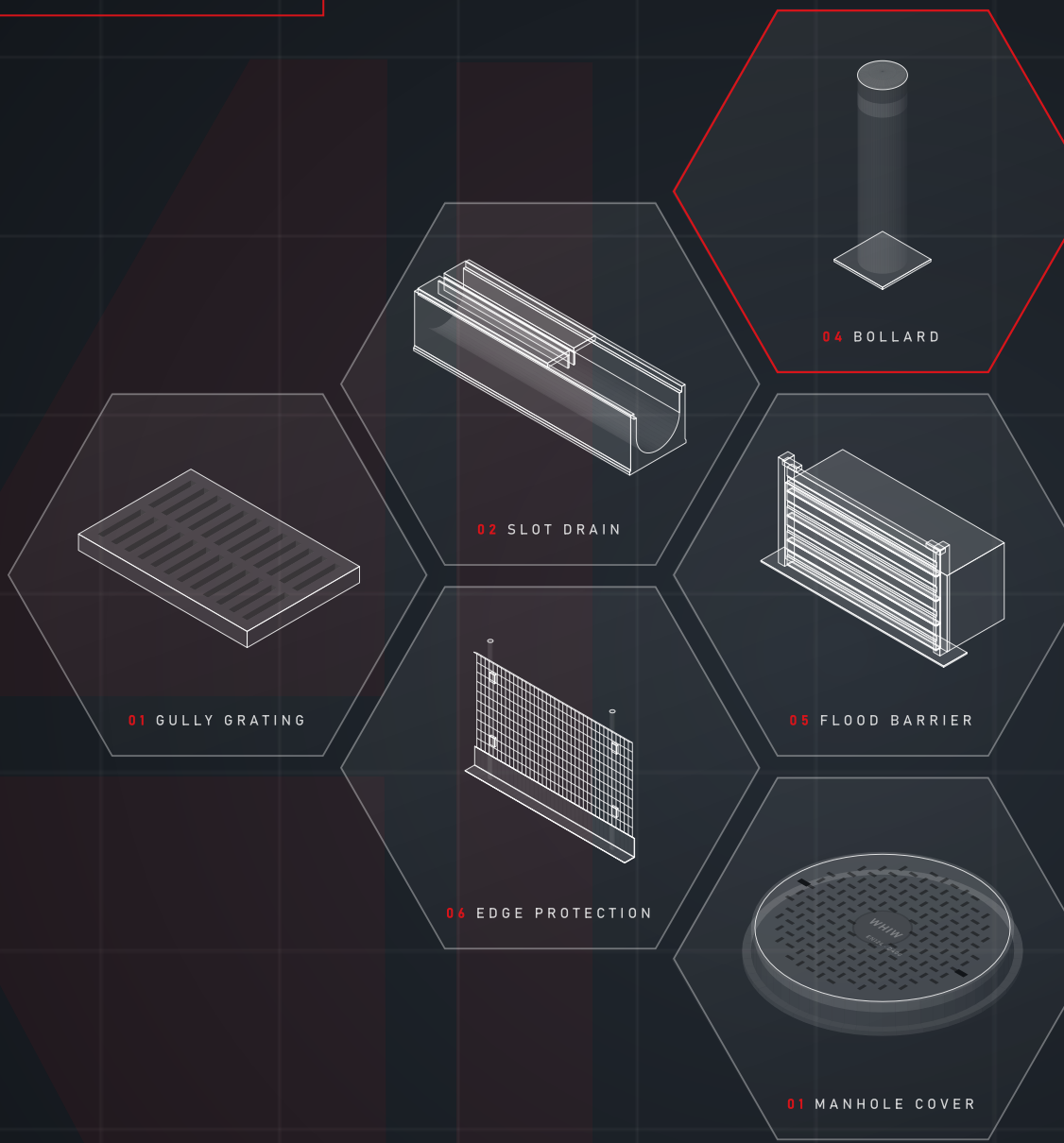

T (852) 2304 1938
F (852) 2304 1928
E enquiry@whiw.com.hk

DOC WHIW-PPC-2026 · REV B

ABOUT WAI HING

ENGINEERED METAL PRODUCTS FOR INFRASTRUCTURE.

For many years, Wai Hing Iron Works Ltd. has been at the forefront of the iron and steel industry, distinguished by its unwavering commitment to quality and innovation. Specialising in proprietary iron and steel products, we also excel in customised solutions tailored to the unique specifications of our clients.

By combining modern fabrication technology with skilled craftsmanship, we deliver products that meet and exceed industry standards. This catalogue brings together our own range and the tested products of our manufacturing partners — one source for drainage, gratings, security, flood protection, fencing and building products.

01
SUPPLY & INSTALL
Supplied loose or fully installed by our own site teams.

02
MADE TO ORDER
Every product can be customised to your drawings and specification.

03
PROVEN PARTNERS
Products from established manufacturers we have worked with for years.

04
TECHNICAL SUPPORT
Shop drawings, material submissions and specification advice.

CONTENTS 目錄

S	Specification — EN 124 load classes	03
01	Gully gratings — ductile iron	04
01	Stainless steel & galvanised gully covers	05
01	Cast iron channel gratings — slot & square-hole	06
01	Hinged gully covers	07
01	Heavy-duty square-hole & slot gratings	08
01	Ductile iron manhole covers	09
01	Ductile iron surface boxes (WSD)	10
01	Matching covers — GMS & stainless steel	11
02	Surface channel matching covers	12
02	Slot drain systems	13
02	Polymer concrete channels & covers	14
03	Steel bar gratings	15
03	Stainless & aluminium gratings, stair treads	16
03	Expanded metal & perforated sheet	17
03	Fibreglass (FRP) grating	18
04	Removable security bollard (IWA 14)	19
04	Fixed, removable & stainless bollards	20
04	Retractable & automatic bollards	21
04	Road blockers, rising beam gates & tyre killers	22
05	Demountable aluminium flood barriers	23
06	Edge protection fence	24
06	3D welded mesh fence & gates	25
06	358 high-security fence	26
06	Temporary fence & crowd control barriers	27
06	Tubular, chain link, double-wire & roll-top fences	28
07	Wheel stoppers & rubber corner guards	29
08	Adjustable paver pedestals	30
08	Raised access floors	31
08	Landscape edging & stainless green-wall mesh	32
09	Corridor handrails & aluminium sliding doors	33
A	How to order	34

MADE TO YOUR SPECIFICATION 按客戶要求訂造

1 SIZE & SHAPE
Any length, width, opening or radius — curved and special shapes.

2 MATERIAL
Cast / ductile iron, carbon steel, SS304 / SS316, aluminium.

3 FINISH & COLOUR
Hot-dip galvanised, powder coat in any RAL, bitumen, brushed.

4 LOAD CLASS
Designed to suit EN 124 A15 – F900 or your project loading.

5 BRANDING
Your logo, project name or utility marking — cast or etched.

6 SUPPLY
Supply only, or supply & install by Wai Hing site teams.

PRODUCT CODES 編號說明

WHIW	CI	450	50	S
PREFIX	FAMILY	WIDTH	HEIGHT	SERIES

ENQUIRIES · 查詢

Need a size that is not listed?

Send us your drawing or the clear opening, load class and finish.

T (852) 2304 1938
F (852) 2304 1928
E enquiry@whiw.com.hk

WAI HING IRON WORKS LTD · 偉興鐵業工程有限公司 · PROPRIETARY PRODUCTS CATALOGUE 2026

BS EN 124-2 · GULLY TOPS & MANHOLE TOPS

LOAD CLASSES 載重等級

EN 124 groups installation locations into six classes by the test load a cover must carry. Select the class from where the cover will be installed — where in doubt, choose the next higher class.

TYPICAL INSTALLATION ZONES



A15	B125	C250	D400	E600	F900
Pedestrian & cycle	Footways · car parks	Kerbside channel	Carriageways	Docks · yards	Aircraft pavements
GROUP 1	GROUP 2	GROUP 3	GROUP 4	GROUP 5	GROUP 6

DWG	SCALE	UNITS	PROJ.	
WHIW-SPEC-01	NTS	mm	3RD ANGLE	A

A15	15 kN GROUP 1	Areas used only by pedestrians and pedal cyclists.
B125	125 kN GROUP 2	Footways, pedestrian areas and comparable areas, car parks and car-parking decks.
C250	250 kN GROUP 3	Gully tops in kerbside channels — max. 0.5 m into the carriageway and 0.2 m into the footway.
D400	400 kN GROUP 4	Carriageways of roads (incl. pedestrian streets), hard shoulders and parking areas for all road vehicles.
E600	600 kN GROUP 5	Areas imposing high wheel loads, e.g. docks and industrial yards.
F900	900 kN GROUP 6	Areas imposing particularly high wheel loads, e.g. aircraft pavements.

CLASS AVAILABILITY — WAI HING RANGE 產品等級一覽

Product family	Page	A15	B125	C250	D400	E600	F900
Ductile iron gully grating · WHIW-CI	04	●	●	●	●	–	–
Stainless steel gully cover · WHIW-SS	05	–	–	–	●	–	–
Hinged gully cover · WHIW-HG	07	●	–	●	–	–	–
Ductile iron manhole cover · WHIW-MH	09	●	●	●	●	–	–
Galvanised surface channel cover · WHIW-GC	12	–	●	–	●	–	–
Slot drain system (class by cover) · WHIW-SD	13	●	●	●	●	–	–
Polymer concrete channel · WHIW-PC	14	●	●	●	●	●	●

● available in the standard range. Other classes can be designed to order — contact us with the site conditions.

✓ CUSTOMISABLE — Made to suit your project — size · material · grade · finish · RAL colour · load class · logo / marking — 可按客戶要求訂造

WAI HING IRON WORKS LTD · 偉興鐵業工程有限公司 · PROPRIETARY PRODUCTS CATALOGUE 2026

WHIW-CI SERIES

DUCTILE IRON GULLY GRATING 球墨鑄鐵坑渠蓋

Heavy-duty one-piece gully gratings for roads, footways and car parks. Slotted and square-hole patterns give high water intake; available from pedestrian class A15 up to carriageway class D400.

BS EN 124 | A15 – D400 | DUCTILE IRON | SLOT / SQUARE-HOLE | ✓ CUSTOMISABLE

ISOMETRIC VIEW

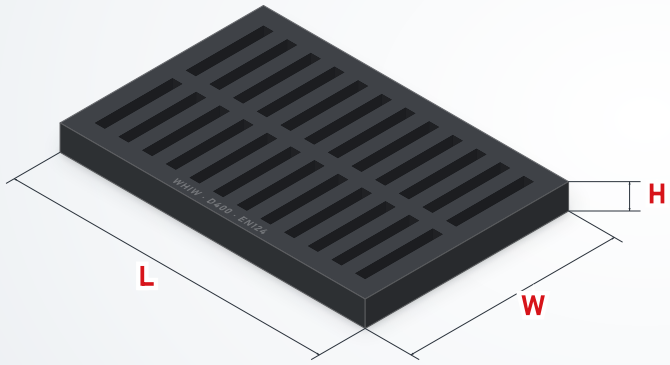

PLAN

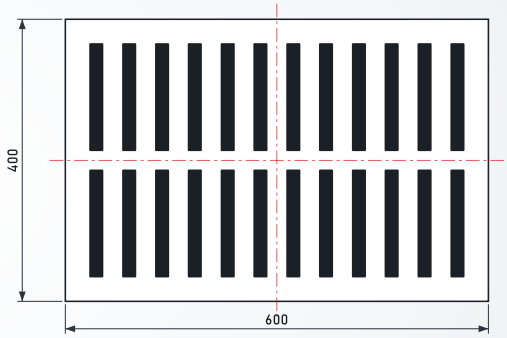

SECTION A–A



Section vertical scale ×1.6 · pattern varies by size

DWG	SCALE	UNITS	PROJ.
WHIW-CI-01	NTS	mm	3RD ANGLE

A

Product code	Class	L	W	H	Weight kg
WHIW-CI-600-50S	C250	600	600	50	50
WHIW-CI-600-35S	A15	600	600	35	19
WHIW-CI-600-50S	B125	724	600	50	55
WHIW-CI-500-50S	C250	500	500	50	37
WHIW-CI-450-50S	D400	750	450	50	53
WHIW-CI-450-45S	B125	750	450	45	40
WHIW-CI-450-40S	B125	750	450	40	47
WHIW-CI-450-40S	D400	750	450	40	49
WHIW-CI-450-35S	B125	750	450	35	33
WHIW-CI-450-40S	A15	750	450	40	27
WHIW-CI-400-45S	B125	1000	400	45	40
WHIW-CI-400-40S	B125	700	400	40	31
WHIW-CI-400-45S	A15	700	400	45	27
WHIW-CI-400-40S	C250	600	400	40	29
WHIW-CI-400-35S	A15	600	400	35	20
WHIW-CI-400-40S	A15	600	400	40	16
WHIW-CI-400-50S	C250	500	400	50	29
WHIW-CI-390-50S	B125	510	390	50	31
WHIW-CI-350-50S	C250	600	350	50	20
WHIW-CI-350-50S	D400	600	350	50	20
WHIW-CI-300-50S	B125	600	300	50	22


SLOT PATTERN


SQUARE-HOLE · D400

- Code and load class cast on every grating
- Slot and square-hole patterns
- Weights approximate

✓ CUSTOMISABLE — Made to suit your project — size · material · grade · finish · RAL colour · load class · logo / marking 可按客戶要求訂造

WAI HING IRON WORKS LTD · 偉興鐵業工程有限公司 · PROPRIETARY PRODUCTS CATALOGUE 2026

WHIW-SS · WHIW-GI SERIES

STAINLESS & GALVANISED COVERS 不銹鋼及鍍鋅坑渠蓋

Fabricated square-hole covers in stainless steel for prestige plazas and pedestrian streets, and galvanised steel grating covers made to any opening. Both are built in our workshop to the size, load class and finish you specify.

SS304 / SS316 | HOT-DIP GALVANISED | D400 STANDARD | MATCHING FRAMES | ✓ CUSTOMISABLE

ISOMETRIC VIEW

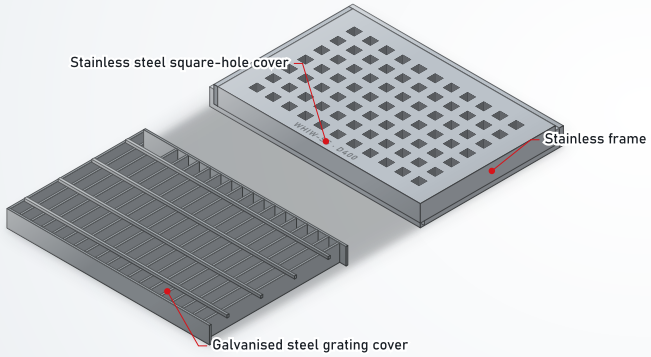

PLAN

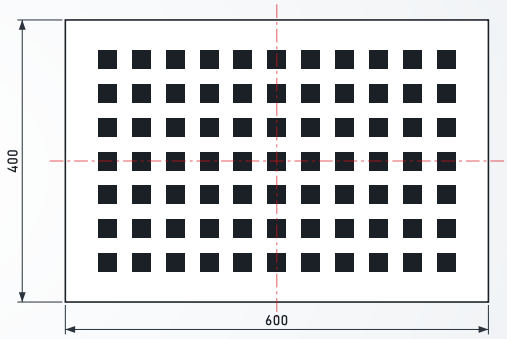

SECTION A–A



Section vertical scale ×1.6 · pattern varies by size · WHIW-SS-400-50S

DWG	SCALE	UNITS	PROJ.	
WHIW-SS-01	NTS	mm	3RD ANGLE	A

STAINLESS STEEL GULLY COVER 不銹鋼坑渠蓋

Product code	Class	L	W	H	Weight kg
WHIW-SS-300-50S	D400	600	300	50	68
WHIW-SS-350-50S	D400	600	350	50	80
WHIW-SS-400-50S	D400	600	400	50	92
WHIW-SS-450-50S	D400	600	450	50	103

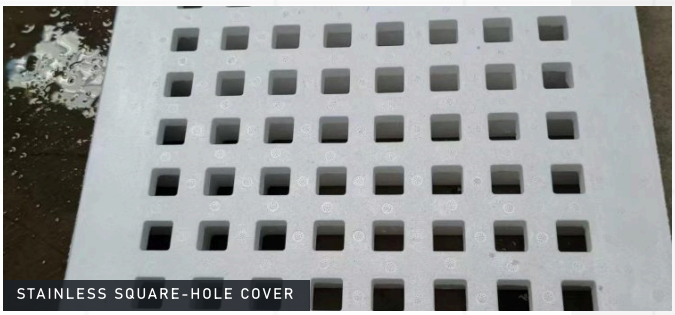
STAINLESS SQUARE-HOLE COVER

GALVANISED GULLY COVER 鍍鋅坑渠蓋

CONSTRUCTION	Welded steel bar grating with banded edges
FINISH	Hot-dip galvanised after fabrication
SIZES	Made to order to suit opening
LOAD CLASS	Designed to the specified class
FRAME	Galvanised angle frame, optional

A galvanised gully captures surface water from roads, driveways and car parks. The zinc coating resists rust and corrosion for long, low-maintenance service.


GALVANISED COVERS

✓ CUSTOMISABLE — Made to suit your project — size · material · grade · finish · RAL colour · load class · logo / marking 可按客戶要求訂造

WAI HING IRON WORKS LTD · 偉興鐵業工程有限公司 · PROPRIETARY PRODUCTS CATALOGUE 2026

WHIW-CS · WHIW-CQ SERIES

CAST IRON CHANNEL GRATINGS 生鐵疏冷

Cast iron surface gratings for U-channels, in slot (rib) and square-hole patterns. Width W suits the channel width C; bars, slots and seating rims are proportioned to each size. Cast iron to BS EN 1561 grade EN-GJL-150 (formerly BS 1452 grade 150).

EN-GJL-150 | BLACK BITUMEN COATED | L 500 / 600 / 745 | ANY SIZE TO ORDER | ✓ CUSTOMISABLE

ISOMETRIC VIEW

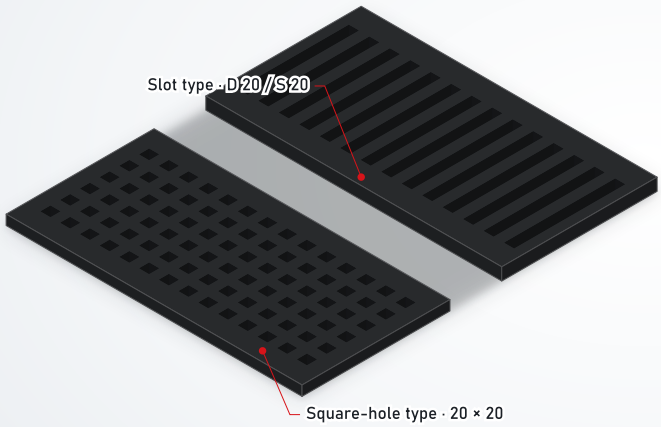

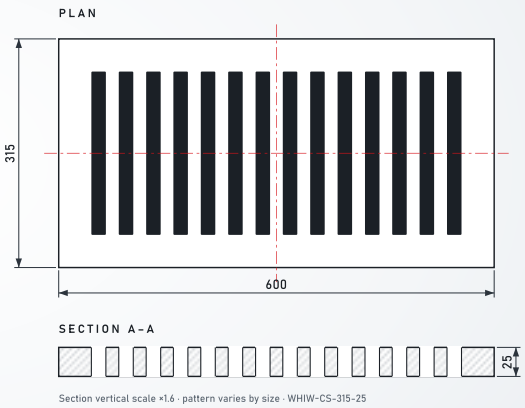

DWG	SCALE	UNITS	PROJ.	
WHIW-CS-01	NTS	mm	3RD ANGLE	A

SLOT TYPE 排骨型

Code	W × L × T	C	Bar D	Slot S	Rim F
WHIW-CS-150-13	150 × 600 × 13	110	13	10	20
WHIW-CS-150-20	150 × 600 × 20	90	15	17	30
WHIW-CS-200-13	200 × 600 × 13	140	13	10	30
WHIW-CS-200-20	200 × 600 × 20	150	15	15	25
WHIW-CS-200-25	200 × 600 × 25	144	20	20	28
WHIW-CS-250-13	250 × 600 × 13	160	13	10	45
WHIW-CS-250-20	250 × 600 × 20	190	15	17	30
WHIW-CS-250-25	250 × 600 × 25	180	20	20	35
WHIW-CS-300-20	300 × 600 × 20	224	20	20	38
WHIW-CS-300-25	300 × 600 × 25	224	20	20	38
WHIW-CS-315-13	315 × 600 × 13	225	13	10	45
WHIW-CS-315-20	315 × 600 × 20	225	20	20	45
WHIW-CS-315-25	315 × 600 × 25	225	20	20	45
WHIW-CS-316-50	316 × 600 × 50	225	20	20	45
WHIW-CS-390-13	390 × 600 × 13	300	13	10	45
WHIW-CS-390-25	390 × 600 × 25	300	20	20	45
WHIW-CS-400-50	400 × 600 × 50	300	20	13	50
WHIW-CS-465-13	465 × 600 × 13	375	13	10	45
WHIW-CS-465-20	465 × 600 × 20	375	20	20	45
WHIW-CS-465-50	465 × 600 × 50	375	20	20	45
WHIW-CS-540-25	540 × 600 × 25	450	20	20	45
WHIW-CS-615-25	615 × 600 × 25	525	20	20	45

SQUARE-HOLE TYPE 方孔型

Code	W × L × T	C	Hole S	Rim F
WHIW-CQ-300-20	300 × 600 × 20	224	20	28
WHIW-CQ-300-25	300 × 600 × 25	224	20	28
WHIW-CQ-300-13	300 × 600 × 13	225	20	37.5
WHIW-CQ-301-25	301 × 500 × 25	225	20	38
WHIW-CQ-301-40	301 × 500 × 40	225	20	38
WHIW-CQ-315-25	315 × 600 × 25	225	20	45
WHIW-CQ-315-40	315 × 600 × 40	225	20	45
WHIW-CQ-325-25	325 × 500 × 25	250	20	38
WHIW-CQ-325-40	325 × 500 × 40	250	20	38
WHIW-CQ-376-25	376 × 500 × 25	300	20	38
WHIW-CQ-376-40	376 × 500 × 40	300	20	38
WHIW-CQ-390-25	390 × 600 × 25	300	20	45
WHIW-CQ-400-50	400 × 600 × 50	300	20	50
WHIW-CQ-440-25	440 × 600 × 25	350	20	45
WHIW-CQ-440-50	440 × 600 × 50	350	20	45
WHIW-CQ-745-50	745 × 745 × 50	630	20	57.5

All dimensions in mm. C = width of U-channel. Cast products have dimensional tolerances; confirm critical sizes on order.

✓ CUSTOMISABLE — Made to suit your project — size · material · grade · finish · RAL colour · load class · logo / marking 可按客戶要求訂造

WAI HING IRON WORKS LTD · 偉興鐵業工程有限公司 · PROPRIETARY PRODUCTS CATALOGUE 2026

WHIW-HG SERIES

HINGED GULLY COVERS 有較疏面井蓋

Square hinged gully covers with seated frame — the cover swings open for cleaning without being removed, so it cannot be lost or stolen. Light duty (A15) for footways and landscaped areas; heavy duty (C250) for kerbside and service areas.

BS EN 124 | A15 / C250 | CAST IRON | OPENING 100 – 450 | ✓ CUSTOMISABLE

ISOMETRIC VIEW

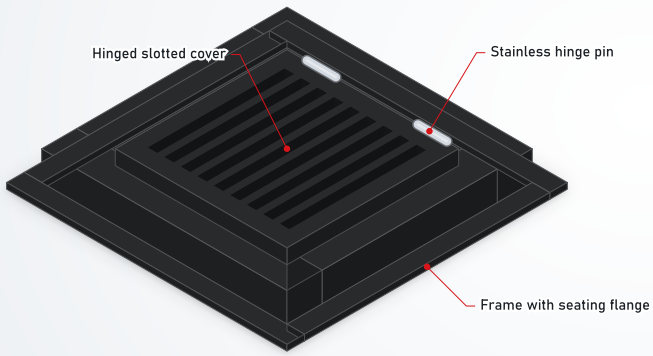

KEY DIMENSIONS

MANHOLE OPENING	Nominal clear size
A · FRAME OPENING	Inside of frame
B · FRAME BASE	Overall bedding size
C · HEIGHT	Overall height
COVER THICKNESS	Top plate

- Captive hinge — cover cannot be lost
- Slotted top for surface water
- Light (L) and heavy (H) duty

DWG	SCALE	UNITS	PROJ.	
WHIW-HG-01	NTS	mm	3RD ANGLE	A

Product code	Opening	A · Frame opening	B · Frame base	C · Height	Cover t	Class
WHIW-HGL100	100 × 100	97 × 97	142 × 142	24	6	A15
WHIW-HGL150	150 × 150	150 × 150	215 × 215	30	6	A15
WHIW-HGL200	200 × 200	200 × 200	268 × 268	37	6	A15
WHIW-HGL225	225 × 225	225 × 225	290 × 290	35	6	A15
WHIW-HGL300	300 × 300	300 × 300	400 × 400	40	8	A15
WHIW-HGL375	375 × 375	380 × 380	490 × 490	52	18	A15
WHIW-HGL400	400 × 400	396 × 396	472 × 472	40	13	A15
WHIW-HGL450	450 × 450	448 × 448	550 × 550	55	18	A15
WHIW-HGH150	150 × 150	150 × 150	225 × 225	40	12	C250
WHIW-HGH200	200 × 200	200 × 200	289 × 289	55	25	C250
WHIW-HGH225	225 × 225	235 × 235	320 × 320	55	25	C250
WHIW-HGH300	300 × 300	300 × 300	420 × 420	60	25	C250
WHIW-HGH400	400 × 400	408 × 408	512 × 512	65	35	C250
WHIW-HGH450	450 × 450	465 × 465	570 × 570	75	40	C250

✓ CUSTOMISABLE — Made to suit your project — size · material · grade · finish · RAL colour · load class · logo / marking 可按客戶要求訂造

WAI HING IRON WORKS LTD · 偉興鐵業工程有限公司 · PROPRIETARY PRODUCTS CATALOGUE 2026

WHIW-HD SERIES · PUBLIC-HOUSING PATTERN

HEAVY-DUTY SQUARE-HOLE GRATINGS 重型方孔梳冷

Cast iron square-hole and channel gratings in the patterns commonly specified for Hong Kong public-housing and estate projects — fixed, 90° corner and hinged versions, in heavy and medium duty.

EN-GJL-150 | HEAVY 24 t TEST LOAD | SS HINGE PINS | BS 3416 BITUMEN | ✓ CUSTOMISABLE

ISOMETRIC VIEW

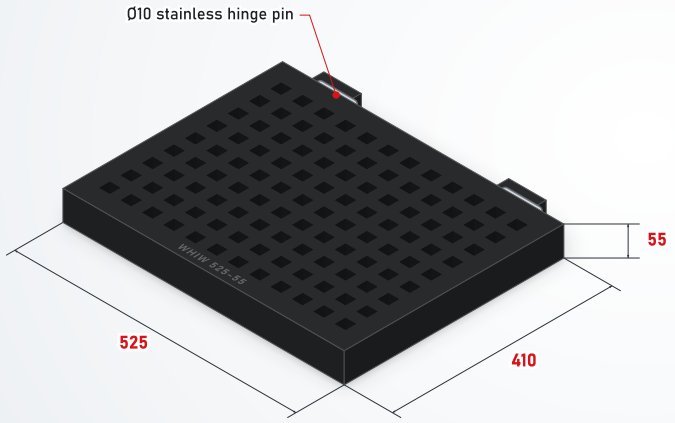

PLAN

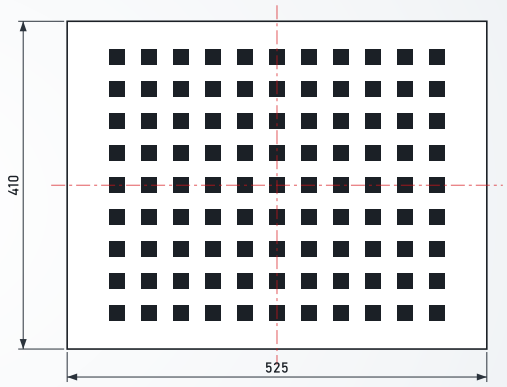

SECTION A–A



Section vertical scale ×1.6 · pattern varies by size · WHIW-HD-525-410-55

DWG	SCALE	UNITS	PROJ.	
WHIW-HD-01	NTS	mm	3RD ANGLE	A

Product code	L × W × H	Pattern	Type	Duty
WHIW-HD-335-335-40	335 × 335 × 40	Square hole	Fixed 90°	Heavy
WHIW-HD-410-410-40	410 × 410 × 40	Square hole	Fixed 90°	Heavy
WHIW-HD-500-335-40	500 × 335 × 40	Square hole	Fixed	Heavy
WHIW-HD-500-410-40	500 × 410 × 40	Square hole	Fixed	Heavy
WHIW-HD-525-335-55	525 × 335 × 55	Square hole	Hinged	Heavy
WHIW-HD-525-410-55	525 × 410 × 55	Square hole	Hinged	Heavy
WHIW-HD-600-220-40	600 × 220 × 40	Channel	Fixed	Heavy
WHIW-HD-600-295-40	600 × 295 × 40	Channel	Fixed	Heavy
WHIW-HD-335-335-40M	335 × 335 × 40	Square hole	Fixed 90°	Medium
WHIW-HD-500-260-40M	500 × 260 × 40	Square hole	Fixed	Medium
WHIW-HD-500-335-40M	500 × 335 × 40	Square hole	Fixed	Medium
WHIW-HD-500-410-40M	500 × 410 × 40	Square hole	Fixed	Medium
WHIW-HD-525-260-40M	525 × 260 × 40	Square hole	Hinged	Medium
WHIW-HD-525-335-40M	525 × 335 × 40	Square hole	Hinged	Medium
WHIW-HD-525-410-40M	525 × 410 × 40	Square hole	Hinged	Medium
WHIW-HD-600-320-50	600 × 320 × 50	20 × 20 hole	Fixed	20 t test

SPECIFICATION 規格

MATERIAL	Cast iron EN-GJL-150 to BS EN 1561
COATING	2 coats black non-toxic water-based bitumen to BS 3416
HINGE	Ø10 × 20 mm stainless steel pin
HEAVY DUTY	Test load 24 tonnes
600 × 320 × 50	Test load 20 tonnes · CI or stainless

BS 1452 SLOT & SQUARE-HOLE RANGE 單坑及方孔

Single-slot and square-hole gratings in widths 200 – 450 mm, length 500 mm and thickness 13 / 25 / 40 mm, cast to BS 1452 grade 150. Housing logo plates and identification plates available.

- Fabricated in length and shape to suit site
- Fixed, 90° corner and hinged versions

✓ CUSTOMISABLE — Made to suit your project — size · material · grade · finish · RAL colour · load class · logo / marking 可按客戶要求訂造

WAI HING IRON WORKS LTD · 偉興鐵業工程有限公司 · PROPRIETARY PRODUCTS CATALOGUE 2026

WHIW-MH SERIES

DUCTILE IRON MANHOLE COVERS 球墨鑄鐵沙井蓋

Round ductile iron manhole covers and frames with anti-slip surface pattern, for footways through to heavy carriageways. Square and rectangular covers, other sizes and custom markings are made to order.

BS EN 124 | A15 – D400 | DUCTILE IRON | CUSTOM MARKING | ✓ CUSTOMISABLE

ISOMETRIC VIEW

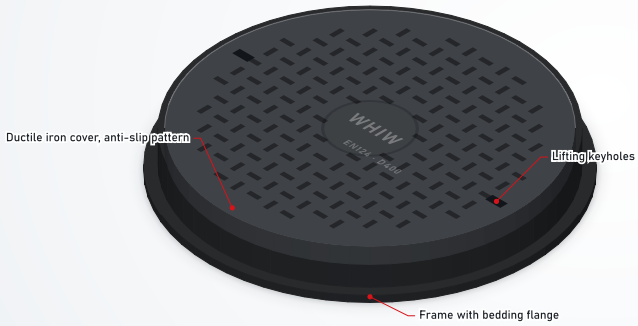

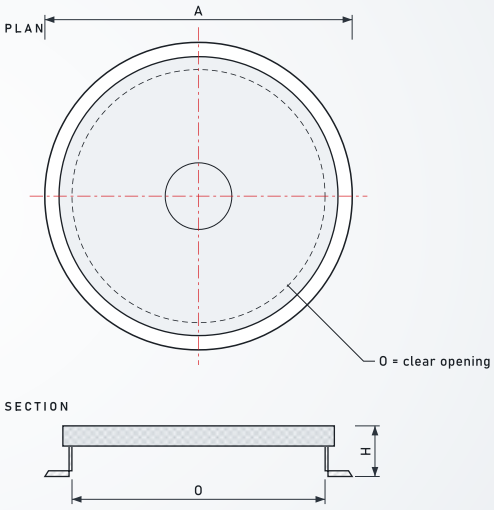

DWG	SCALE	UNITS	PROJ.
WHIW-MH-01	NTS	mm	3RD ANGLE

A

Product code	Class	A · Frame	O · Opening	H	Weight kg
WHIW-MH-R01	C250	1150	1000	100	113
WHIW-MH-R02	B125	1050	900	100	74
WHIW-MH-R03	D400	940	800	100	89
WHIW-MH-R04	C250	900	800	80	60
WHIW-MH-R05	A15	900	800	40	34
WHIW-MH-R06	D400	970	748	100	97
WHIW-MH-R07	D400	900	740	100	84
WHIW-MH-R08	D400	900	700	100	79
WHIW-MH-R09	C250	900	700	100	57
WHIW-MH-R10	D400	850	700	80	55
WHIW-MH-R11	D400	800	700	75	50
WHIW-MH-R12	B125	800	700	60	36
WHIW-MH-R13	A15	800	700	50	25.5
WHIW-MH-R14	A15	780	680	35	21
WHIW-MH-R15	D400	730	600	90	45
WHIW-MH-R16	D400	700	600	60	40
WHIW-MH-R17	B125	700	600	50	22
WHIW-MH-R18	D400	630	500	90	35
WHIW-MH-R19	A15	500	400	40	12

FEATURES 特點

- Anti-noise — seated cover does not rock
- Anti-theft — lockable / hinged options
- Anti-fall — secure seating in frame
- Anti-slip surface pattern
- Anti-displacement under traffic
- Long service life

A = outside diameter of frame, O = clear opening, H = overall height. Weights approximate.

✓ CUSTOMISABLE — Made to suit your project — size · material · grade · finish · RAL colour · load class · logo / marking 可按客戶要求訂造

WAI HING IRON WORKS LTD · 偉興鐵業工程有限公司 · PROPRIETARY PRODUCTS CATALOGUE 2026

WHIW-SB SERIES · WSD STANDARD

DUCTILE IRON SURFACE BOXES 球鐵水掣井蓋

Ductile iron surface boxes for water-supply valves and meters, made to the Water Supplies Department standard drawings and cast with the H.K. W.S. marking. Light-duty boxes for footways; heavy-duty boxes for carriageways and service roads.

EN-GJS-500-7 | WSD 7.44 – 7.48 | H.K. W.S. MARKING | LIGHT / HEAVY DUTY | ✓ CUSTOMISABLE

ISOMETRIC VIEW

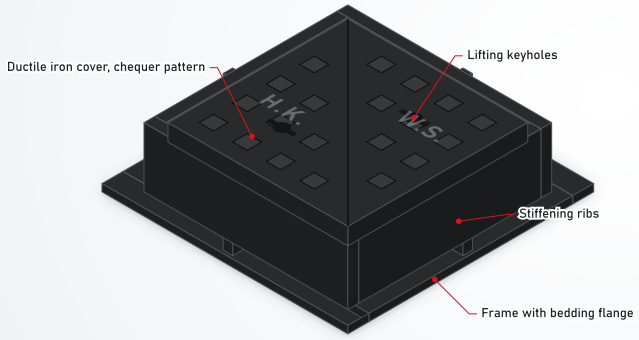

PLAN — WSD 7.47C

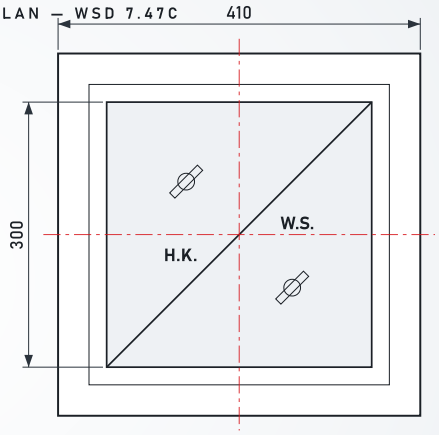

SECTION

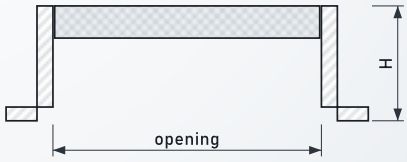

DWG	SCALE	UNITS	PROJ.
WHIW-SB-01	NTS	mm	3RD ANGLE

A

Product code	WSD drawing	Opening	Cover	Frame	Height	Loading
WHIW-SB-7.44B-75	WSD 7.44B	115 × 140	114 × 136	180 × 200	75	Light · 5 kN
WHIW-SB-7.45B-100	WSD 7.45B	180 × 180	176 × 176	260 × 260	100	Light · 86 kN
WHIW-SB-7.47C-100	WSD 7.47C	294 × 294	300 × 300	410 × 410	100	Heavy · 350 kN
WHIW-SB-7.47C-150	WSD 7.47C	294 × 294	300 × 300	410 × 410	150	Heavy · 350 kN
WHIW-SB-7.48C-150	WSD 7.48C	604 × 604	600 × 600	800 × 800	150	Heavy · 600 kN

SPECIFICATION 規格

MATERIAL	Ductile iron, tensile tested to BS EN 1563 grade EN-GJS-500-7
MARKING	H.K. W.S. cast on cover
COVER	Chequer anti-slip pattern with lifting keyholes
COATING	Black bitumen

NOTES 備註

- Sizes follow WSD standard drawings 7.44 – 7.48
- Heavy-duty covers split diagonally for easy lifting
- Frames bedded on mortar with integral flange
- Other WSD and utility patterns cast to order

✓ CUSTOMISABLE — Made to suit your project — size · material · grade · finish · RAL colour · load class · logo / marking — 可按客戶要求訂造

WAI HING IRON WORKS LTD · 偉興鐵業工程有限公司 · PROPRIETARY PRODUCTS CATALOGUE 2026

WHIW-MC-G · WHIW-MC-S SERIES

MATCHING COVERS — GMS & STAINLESS STEEL 鋪面配套蓋板

Recessed covers for service chambers, drainage pits and trenches in paved areas. Each cover is a fabricated metal tray filled with the surrounding paving, so it sits flush and blends into the finished surface. Made in hot-dip galvanised mild steel (GMS) or in stainless steel, to the opening you specify.

GMS · GALVANISED | STAINLESS SS304 / SS316 | PAVING INFILL | MADE TO ORDER | ✓ CUSTOMISABLE

GMS MATCHING COVER · WHIW-MC-G

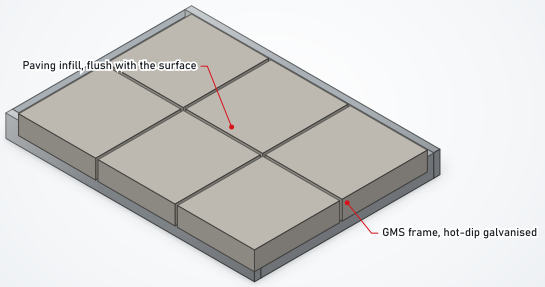

STAINLESS STEEL MATCHING COVER · WHIW-MC-S

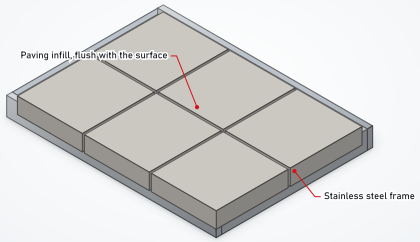


STAINLESS · INFILLED


GMS · MULTI-LEAF FRAME


GMS TRAYS · READY


GMS TRAYS · ON SITE

GMS TYPE 鍍鋅鋼款

CODE	WHIW-MC-G
MATERIAL	Mild steel plate and angle
FINISH	Hot-dip galvanised after fabrication
CONSTRUCTION	Tray with welded mesh and drain holes to key the infill
SIZES	Made to order, single or multi-leaf

STAINLESS STEEL TYPE 不銹鋼款

CODE	WHIW-MC-S
MATERIAL	SS304 or SS316 plate and angle
FINISH	Satin, with welds dressed
CONSTRUCTION	Tray with welded mesh and drain holes to key the infill
SIZES	Made to order, single or multi-leaf

NOTES 備註

- Infill in paving, tile, stone, brick or concrete, laid to match the surrounding finish
- Larger leaves are fitted with lifting points
- Frame and tray designed to the specified load class

HOW TO SPECIFY 訂購資料

- Opening size and depth of paving build-up
- Number of leaves and location of lifting points
- Material — GMS or stainless steel (SS304 / SS316)
- Load class and drawings, if available

✓ CUSTOMISABLE — Made to suit your project — size · material · grade · finish · RAL colour · load class · logo / marking 可按客戶要求訂造

WAI HING IRON WORKS LTD · 偉興鐵業工程有限公司 · PROPRIETARY PRODUCTS CATALOGUE 2026

WHIW-GC SERIES

SURFACE CHANNEL COVERS 明渠配套蓋板

Hot-dip galvanised steel grating covers with matching bent-angle frames for surface channels. Straight and curved units are made to follow the channel line, in carriageway class D400 or footway class B125.

HOT-DIP GALVANISED | B125 / D400 | STRAIGHT & CURVED | ANGLE FRAMES | ✓ CUSTOMISABLE

ISOMETRIC VIEW

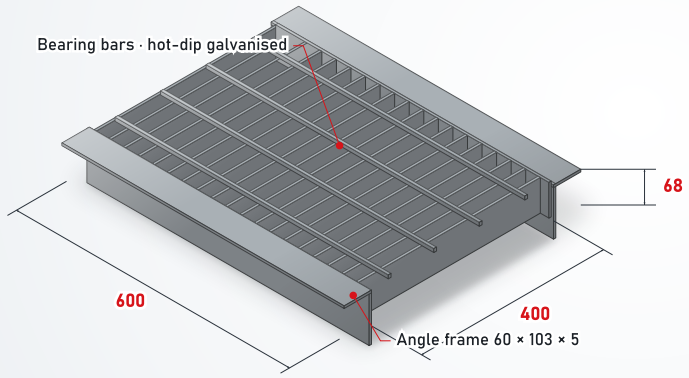


INSTALLED CHANNEL COVERS

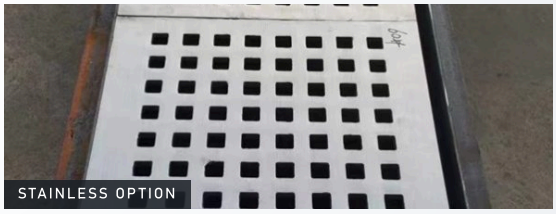
STAINLESS OPTION

DWG	SCALE	UNITS	PROJ.	
WHIW-GC-01	NTS	mm	3RD ANGLE	A

Type	W × L	H	Class	Unit weight kg	Bent-angle frame
WHIW-GC-A-D400	400 × 600	68	D400	23.65	60 × 103 × 5 both sides
WHIW-GC-A-B125	400 × 600	48	B125	21.15	60 × 83 × 5 both sides
WHIW-GC-B-D400	600 × 600	68	D400	32.90	60 × 103 × 5 + 260 × 103 × 5
WHIW-GC-B-B125	600 × 600	48	B125	29.90	60 × 83 × 5 + 260 × 83 × 5
WHIW-GC-C-D400	400 × 495	123	D400	48.70	60 × 128 × 5 both sides
WHIW-GC-C-B125	400 × 495	103	B125	42.60	60 × 108 × 5 both sides
WHIW-GC-D-D400	475 × 495	108	D400	46.00	60 × 113 × 5 both sides
WHIW-GC-D-B125	475 × 495	88	B125	41.40	60 × 93 × 5 both sides

- Curved units for radiused channels
- Single-side or both-side frames
- Frame cast into channel edge
- Hot-dip galvanised after fabrication
- Bearing bars sized per load class
- Weights approximate

✓ CUSTOMISABLE — Made to suit your project — size · material · grade · finish · RAL colour · load class · logo / marking 可按客戶要求訂造

WAI HING IRON WORKS LTD · 偉興鐵業工程有限公司 · PROPRIETARY PRODUCTS CATALOGUE 2026

WHIW-SD SERIES

SLOT DRAIN SYSTEM 縫隙式排水溝

Modular polymer channels with interchangeable slot and grate covers — a near-invisible drainage line for plazas, podiums, pedestrian streets and vehicle areas. Choose the channel by flow, then the cover by load class and finish.

HDPE / PP CHANNEL | 1000 mm UNITS | A15 – D400 BY COVER | JOINTS · END CAPS | ✓ CUSTOMISABLE

ISOMETRIC — T-SLOT COVER, CUTAWAY

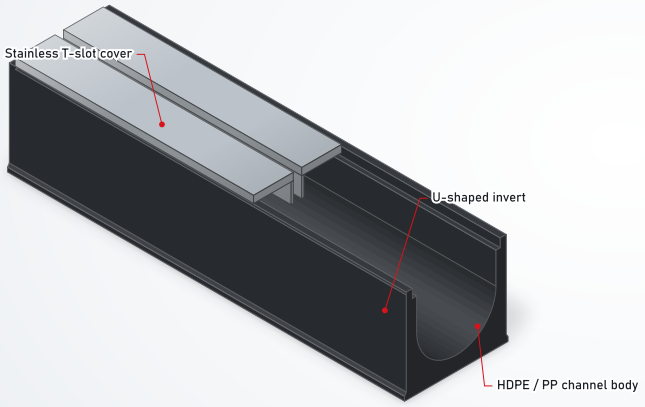

SECTION — WHIW-SD-100/100

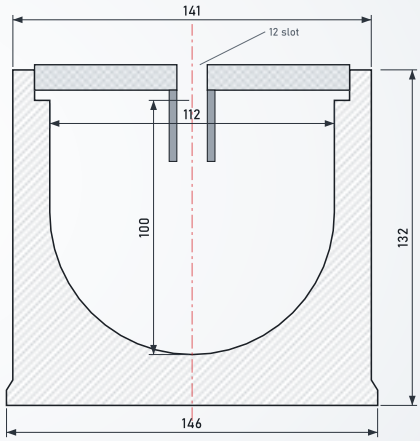

DWG	SCALE	UNITS	PROJ.
WHIW-SD-01	NTS	mm	3RD ANGLE

A

CHANNEL SIZES 規格

Product code	Nominal W × D	Internal W	Top W	Base W	Invert depth	Overall H	Length
WHIW-SD-100/045	**100 × 45**	113	141	145	48	80	1000
WHIW-SD-100/100	**100 × 100**	112	141	146	100	132	1000
WHIW-SD-100/150	**100 × 150**	113	141	146	158	190	1000
WHIW-SD-150/150	**150 × 150**	152	201	218	152	195	1000
WHIW-SD-200/200	**200 × 200**	200	246	266	200	240	1000
WHIW-SD-200/250	**200 × 250**	200	241	260	250	304	1000
WHIW-SD-250/250	**250 × 250**	258	299	318	250	304	1000

COVER OPTIONS 蓋板選擇

Cover type	Load class	Material
Stainless steel grate cover	A15	Stainless / galvanised steel
HDPE plastic grate cover	B125	HDPE / PP
L-slot stainless steel cover	B125 C250 D400	Stainless steel
T-slot stainless steel cover	B125 C250 D400	Stainless steel
Stainless steel mesh grate	C250 D400	Stainless steel
Galvanised steel mesh grate	C250 D400	Galvanised steel
Cast iron grate cover	D400	Cast iron



CHANNEL + GRATE

- Four-way joints, end caps, outlets
- Stainless covers made to length

✓ CUSTOMISABLE — Made to suit your project — size · material · grade · finish · RAL colour · load class · logo / marking 可按客戶要求訂造

WAI HING IRON WORKS LTD · 偉興鐵業工程有限公司 · PROPRIETARY PRODUCTS CATALOGUE 2026

WHIW-PC SERIES

POLYMER CONCRETE CHANNEL 樹脂混凝土排水溝

Polymer concrete channels with a screw-lock cover system. Polymer binder in place of cement gives a dense, chemical-resistant body that is light to handle and accepts polymer, slot, stainless mesh, galvanised mesh or cast iron covers.

POLYMER CONCRETE | A15 – F900 BY COVER | SCREW-LOCK COVERS | 1000 mm UNITS | ✓ CUSTOMISABLE

ISOMETRIC VIEW

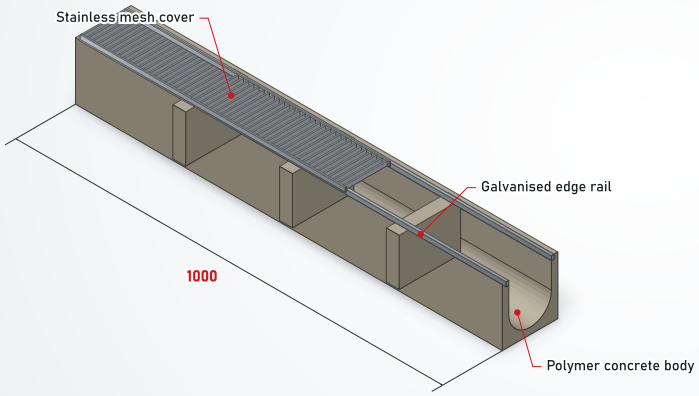

SECTION — 100 / 150

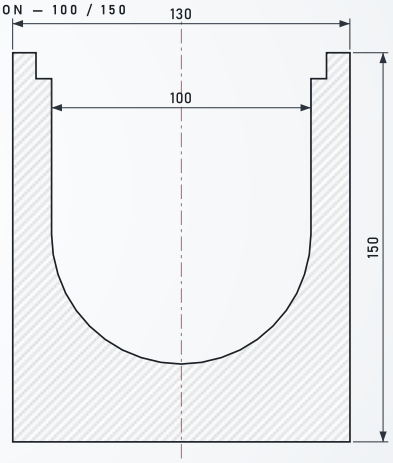

DWG	SCALE	UNITS	PROJ.	
WHIW-PC-01	NTS	mm	3RD ANGLE	A

TECHNICAL DATA — 100 / 150 技術數據

LENGTH	1000 mm
INTERNAL WIDTH	100 mm
OVERALL WIDTH / HEIGHT	130 / 150 mm
WEIGHT	12 kg
INLET CROSS-SECTION	1000 cm² / m
DRAINAGE CROSS-SECTION	135 cm²
INLAYING DEPTH	150 mm

- Smooth bore — high flow, self-cleaning
- Resistant to chemicals and frost
- Other widths and depths to order

COVER OPTIONS 蓋板選擇

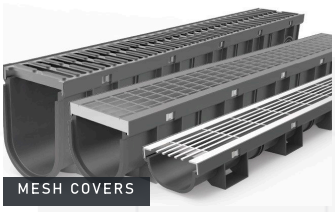
MESH COVERS

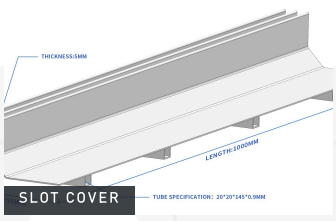
SLOT COVER


PERFORATED COVER


STAINLESS

✓ CUSTOMISABLE — Made to suit your project — size · material · grade · finish · RAL colour · load class · logo / marking 可按客戶要求訂造

WAI HING IRON WORKS LTD · 偉興鐵業工程有限公司 · PROPRIETARY PRODUCTS CATALOGUE 2026

WHIW-G SERIES

STEEL BAR GRATING 鋼格柵板

Welded steel bar grating for platforms, walkways, trench covers, stair treads and plant rooms. Bearing bars and twisted cross bars are pressure-welded, then hot-dip galvanised. Panels are cut, banded and notched to your layout.

Q235 / S235 STEEL | HOT-DIP GALVANISED | PLAIN / SERRATED | CUT TO LAYOUT | ✓ CUSTOMISABLE

ISOMETRIC VIEW

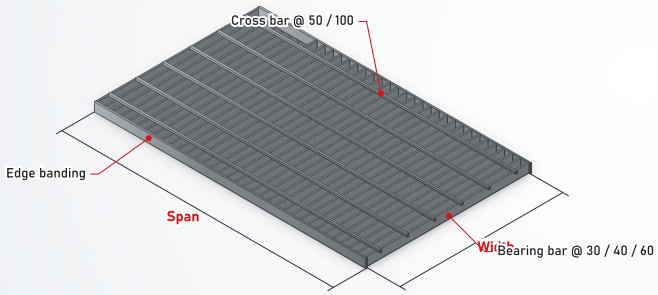

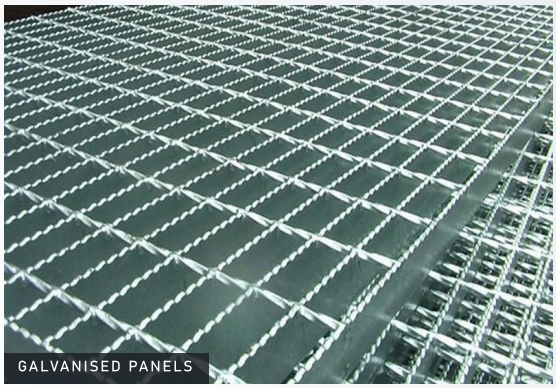
GALVANISED PANELS

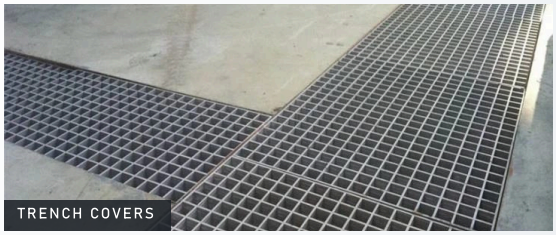
TRENCH COVERS

DWG	SCALE	UNITS	PROJ.	
WHIW-G-01	NTS	mm	3RD ANGLE	A

BEARING BAR SIZES 扁鋼規格

Series	Bearing bar h × t	Bearing pitch	Cross-bar pitch	Cross bar
G203	20 × 3	30 / 40 / 60	50 / 100	Ø6 / Ø8
G253	25 × 3	30 / 40 / 60	50 / 100	Ø6 / Ø8
G255	25 × 5	30 / 40 / 60	50 / 100	Ø6 / Ø8
G303	30 × 3	30 / 40 / 60	50 / 100	Ø6 / Ø8
G325	32 × 5	30 / 40 / 60	50 / 100	Ø6 / Ø8
G403	40 × 3	30 / 40 / 60	50 / 100	Ø6 / Ø8
G405	40 × 5	30 / 40 / 60	50 / 100	Ø6 / Ø8
G505	50 × 5	30 / 40 / 60	50 / 100	Ø6 / Ø8
G655	65 × 5	30 / 40 / 60	50 / 100	Ø6 / Ø8

READING THE DESIGNATION 型號說明

G	325	30	100
grating	bar 32 × 5	pitch 30	cross 100

- Edge banding, toe plates and cut-outs
- Circular and special-shape panels
- Saddle clips and fixing kits supplied
- Stainless steel grating to order

✓ CUSTOMISABLE — Made to suit your project — size · material · grade · finish · RAL colour · load class · logo / marking — 可按客戶要求訂造

WAI HING IRON WORKS LTD · 偉興鐵業工程有限公司 · PROPRIETARY PRODUCTS CATALOGUE 2026

WHIW-G SERIES · SPECIAL

STAINLESS, ALUMINIUM & STAIR TREADS 不銹鋼、鋁格柵及樓梯踏板

Where corrosion, weight or appearance matter, gratings are made in stainless steel or aluminium. Stair treads come with end plates for bolting and an anti-slip nosing, sized to your stair width.

SS304 / SS316 | ALUMINIUM | SERRATED SURFACE | STAIR TREADS | ✓ CUSTOMISABLE

ISOMETRIC VIEW

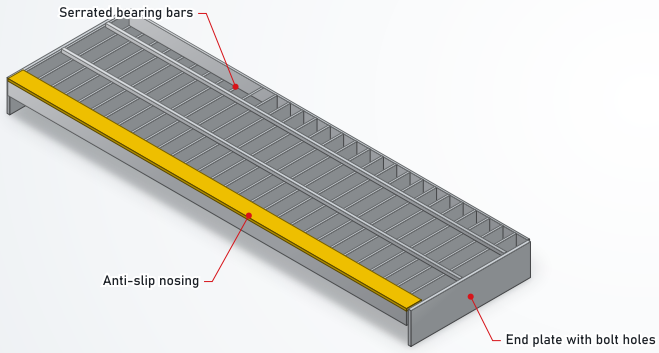


SERRATED BEARING BARS


PERFORATED PLANK OPTION

DWG	SCALE	UNITS	PROJ.	
WHIW-ST-01	NTS	mm	3RD ANGLE	A

Material	Finish	Surface	Typical application
Carbon steel Q235 / S235	Hot-dip galvanised	Plain / serrated	Platforms, walkways, trench covers
Stainless steel 304	Pickled & passivated	Plain / serrated	Food, pharmaceutical, architectural
Stainless steel 316	Pickled & passivated	Plain / serrated	Marine, coastal and chemical areas
Aluminium	Mill / anodised	Plain / serrated	Lightweight access, roofs, plant rooms

STAIR TREADS 樓梯踏板

WIDTH	To suit stair
DEPTH	To suit going
END PLATES	Pre-drilled for bolting to stringers
NOSING	Chequer plate, abrasive or yellow contrast

OTHER FORMS 其他

- Riveted and press-locked gratings
- Aluminium plank (punched) grating
- Trench and inlet grates with frames
- Embedded angle frames

✓ CUSTOMISABLE — Made to suit your project — size · material · grade · finish · RAL colour · load class · logo / marking 可按客戶要求訂造

WAI HING IRON WORKS LTD · 偉興鐵業工程有限公司 · PROPRIETARY PRODUCTS CATALOGUE 2026

WHIW-EM · WHIW-PF SERIES

EXPANDED METAL & PERFORATED SHEET 鋼板網及沖孔板

Expanded metal is slit and stretched from one sheet — no material is lost and the mesh is rigid and light. Perforated sheet is punched to any hole pattern. Both are used for walkways, screens, façades, guards and ceilings.

MILD STEEL / GALV | STAINLESS | ALUMINIUM | ANY PATTERN | ✓ CUSTOMISABLE

ISOMETRIC VIEW

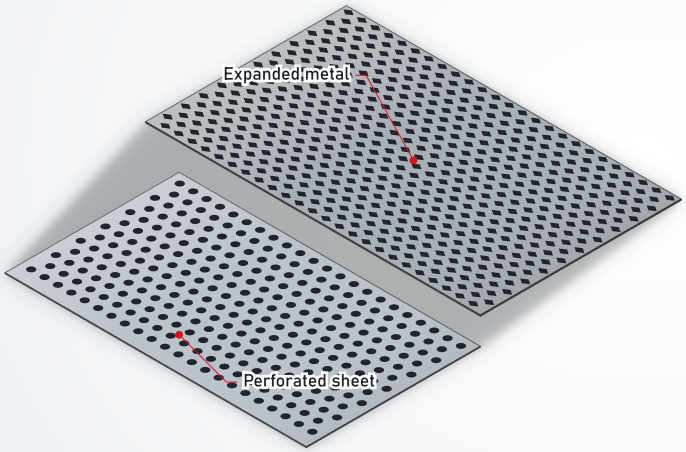

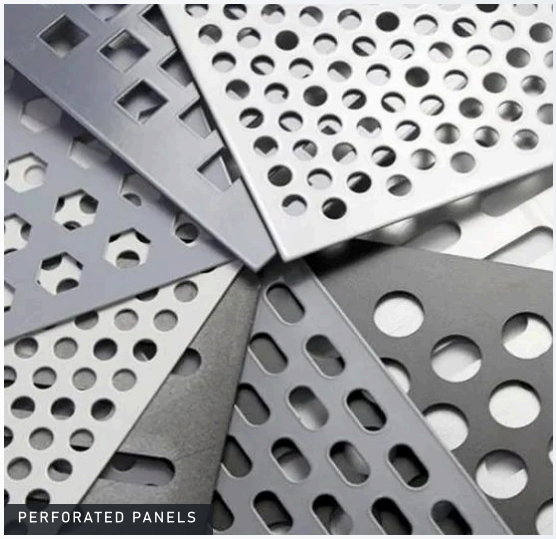
PERFORATED PANELS

DWG	SCALE	UNITS	PROJ.
WHIW-EM-01	NTS	mm	3RD ANGLE

A

EXPANDED METAL — STANDARD RANGE 鋼板網規格

Code	Thickness	Strand W	SWM	LWM	Sheet W m	Length m
WHIW-EM-11	0.5	0.5	2	4	1	30
WHIW-EM-12	0.5	0.8	3	6	1	30
WHIW-EM-13	0.6	1	4	8	1	30
WHIW-EM-14	0.7	1	6	12	1	30
WHIW-EM-15	1	1.2	10	20	1	10
WHIW-EM-16	1.2	1.4	15	30	1.2	10
WHIW-EM-20	1.4	1.7	20	40	2	10
WHIW-EM-21	2	1.8	30	60	1.5	10
WHIW-EM-22	2.2	2	20	40	2	10
WHIW-EM-23	2.8	3	30	60	2	10
WHIW-EM-24	4.2	4	40	80	2	10
WHIW-EM-50	5	4.5	50	100	1	4
WHIW-EM-51	6	5.5	40	80	1	3
WHIW-EM-52	8	7.8	50	100	1	3

SWM / LWM = short / long way of mesh (mm). Raised (standard) or flattened.

PERFORATED SHEET 沖孔板

MATERIALS	Stainless steel, mild steel, aluminium, copper
HOLES	Round, square, slot, hexagon, decorative
THICKNESS & SIZE	To your requirement
FINISH	Mill, galvanised, powder coated, anodised

- Architectural façades and sun screens
- Machine guards and ventilation
- Ceilings, balustrade infill, signage

✓ CUSTOMISABLE — Made to suit your project — size · material · grade · finish · RAL colour · load class · logo / marking 可按客戶要求訂造

WAI HING IRON WORKS LTD · 偉興鐵業工程有限公司 · PROPRIETARY PRODUCTS CATALOGUE 2026

WHIW-FRP SERIES

FIBREGLASS (FRP) GRATING 玻璃纖維格柵

Moulded fibreglass-reinforced plastic grating — corrosion-proof, non-conductive, non-magnetic and light to handle. Used where steel would rust or conduct: water and sewage plants, chemical plants, marine structures, cooling towers, electrical areas and pool surrounds.

MOULDED FRP | CORROSION-PROOF | NON-CONDUCTIVE | 5 COLOURS | ✓ CUSTOMISABLE

ISOMETRIC VIEW

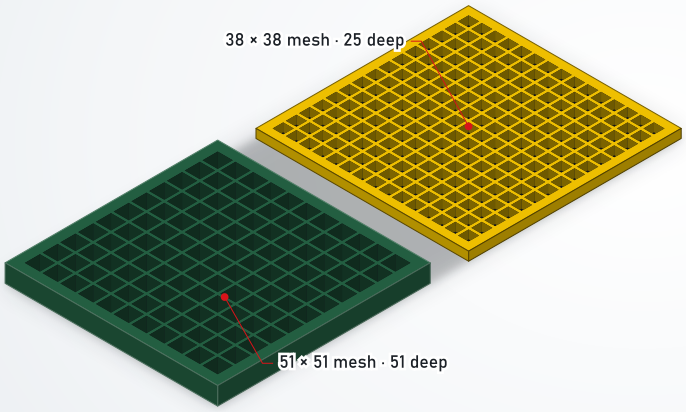



MOULDED FRP GRATING

DWG	SCALE	UNITS	PROJ.
WHIW-FRP-01	NTS	mm	3RD ANGLE

A

MOULDED GRATING RANGE 規格

Code	Mesh mm	Depth	Open area	kg / m²	Panel sizes mm
WHIW-FRP-25 × 38	38 × 38 square	25	70 %	12.2	914 × 3048 · 1219 × 2438 · 1219 × 3658
WHIW-FRP-38 × 38	38 × 38 square	38	70 %	18.3	914 × 3048 · 1219 × 2438 · 1524 × 3048 · 1219 × 3658
WHIW-FRP-51 × 51	51 × 51 square	51	72 %	19.5	1219 × 3658
WHIW-FRP-25 × 102R	25 × 102 rectangular	25	69 %	12.2	914 × 3048 · 1219 × 2438
WHIW-FRP-19 × 102R	19 × 102 rectangular	25	62 %	14.6	1219 × 2438 · 1219 × 3048 · 1219 × 3658
WHIW-FRP-MM19-25	19 × 19 micro-mesh	25	—	14.1	1219 × 3658
WHIW-FRP-MM19-38	19 × 19 micro-mesh	38	—	22.0	1219 × 3658

Weights approximate. Panels cut to size with sealed edges; specialty patterns and depths on request.

OPTIONS 選項

RESIN	General-purpose, corrosion-resistant vinyl ester or fire-retardant
COLOURS	Green, yellow, dark grey, light grey, orange
SURFACE	Concave anti-slip or grit-top
FIXINGS	Stainless steel M-clips and saddle clips

ADVANTAGES 優點

- No rust, no painting, long service life
- Electrically and thermally non-conductive
- About a quarter the weight of steel grating
- Cut on site with ordinary tools

✓ CUSTOMISABLE — Made to suit your project — size · material · grade · finish · RAL colour · load class · logo / marking — 可按客戶要求訂造

WAI HING IRON WORKS LTD · 偉興鐵業工程有限公司 · PROPRIETARY PRODUCTS CATALOGUE 2026

WHIW-RB-219 · IMPACT TESTED

REMOVABLE SECURITY BOLLARD 可拆卸防撞護柱

Crash-tested fixed / removable bollard for hostile-vehicle mitigation. The 350 mm shallow-mount foundation clears congested underground services, and the removable post allows planned vehicle access to plazas, malls and walking streets.

IWA 14-1:2013 | 7.2 t @ 48 km/h | ZERO PENETRATION | 350 mm SHALLOW MOUNT | ✓ CUSTOMISABLE

ISOMETRIC — FOUNDATION SHOWN HIDDEN

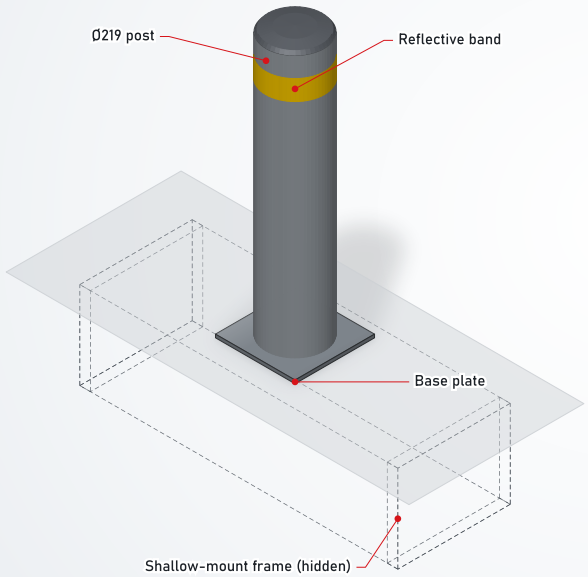

ELEVATION

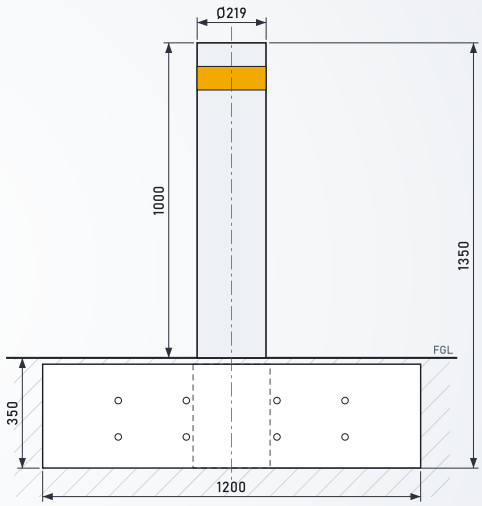

PLAN

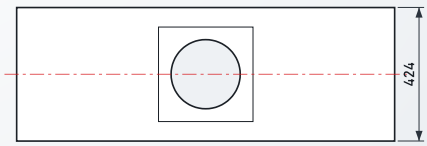

DWG	SCALE	UNITS	PROJ.	
WHIW-RB-01	NTS	mm	3RD ANGLE	A

SPECIFICATION 技術參數

POST DIAMETER	Ø219 ±1 mm
HEIGHT ABOVE GROUND	1000 ±5 mm
FOUNDATION FRAME	1200 L × 424 W × 330 H mm
OVERALL PRODUCT	1200 L × 424 W × 1345 H mm
MATERIAL	Q345 carbon steel · SS304 / SS316 optional
SURFACE TREATMENT	Hot-dip galvanised + powder coated
COLOUR	Grey standard · any RAL on request
IMPACT RATING	IWA14-1:2013 V/7200[N2A]/48/90:0.0


STAINLESS STEEL BOLLARDS

Code	Finish
WHIW-RB-219-CS	Q345 steel, galvanised + painted
WHIW-RB-219-SP	Stainless steel, painted
WHIW-RB-219-SB	Stainless steel, satin brushed

✓ CUSTOMISABLE — Made to suit your project — size · material · grade · finish · RAL colour · load class · logo / marking 可按客戶要求訂造

WAI HING IRON WORKS LTD · 偉興鐵業工程有限公司 · PROPRIETARY PRODUCTS CATALOGUE 2026

WHIW-BF · WHIW-BR SERIES

FIXED & REMOVABLE BOLLARDS 固定及可拆卸護柱

General-purpose bollards for pedestrian protection, traffic control and building frontages. Fixed bollards are cast into the footing; removable bollards lock into a flush ground socket so access can be opened when needed.

STAINLESS / CARBON STEEL | FIXED · REMOVABLE | REFLECTIVE BANDS | LOGO ETCHING | ✓ CUSTOMISABLE

ISOMETRIC VIEW

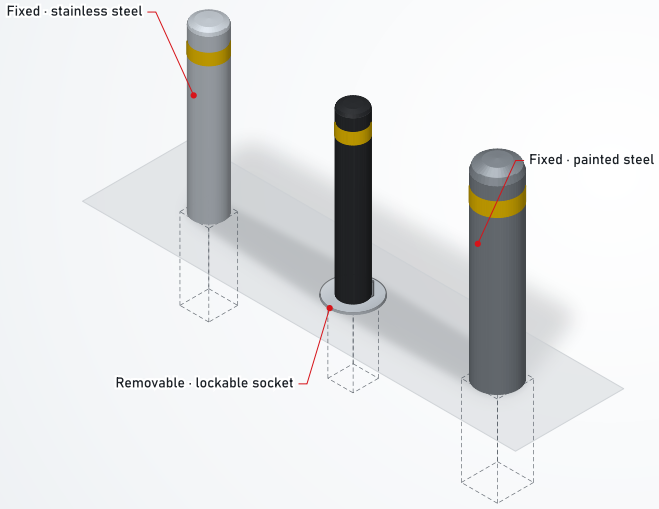



STAINLESS STEEL BOLLARDS · WAI HING

DWG	SCALE	UNITS	PROJ.	
WHIW-BF-01	NTS	mm	3RD ANGLE	A

Product code	Type	Body	Finish	Installation
WHIW-BF-SS	Fixed	Stainless steel 304 / 316	Satin brushed / mirror	Cast into concrete footing
WHIW-BF-CS	Fixed	Carbon steel tube	Galvanised + powder coat (RAL)	Cast in or base-plate bolted
WHIW-BR-SS	Removable	Stainless steel	Satin brushed	Lockable flush ground socket
WHIW-BR-CS	Removable	Carbon steel tube	Galvanised + powder coat (RAL)	Lockable flush ground socket
WHIW-BF-DM	Fixed, dome top	Steel or stainless	Any	Cast in / bolted

OPTIONS 選項

- Diameter, height and wall thickness to suit project
- Reflective band, LED ring or engraved logo
- Flat, dome or chamfered caps
- Padlock or key-operated socket lid

ALSO AVAILABLE 其他

- Retractable and automatic bollards — see page 21
- Crash-rated versions — see page 19

✓ CUSTOMISABLE — Made to suit your project — size · material · grade · finish · RAL colour · load class · logo / marking — 可按客戶要求訂造

WAI HING IRON WORKS LTD · 偉興鐵業工程有限公司 · PROPRIETARY PRODUCTS CATALOGUE 2026

WHIW-BA SERIES

RETRACTABLE & AUTOMATIC BOLLARDS 升降式防撞柱

Rising bollards that sink flush with the road to let authorised vehicles through. Manual and semi-automatic bollards are raised by hand with gas-spring assistance; automatic bollards are driven hydraulically or electro-mechanically and operated from a control cabinet, remote, card reader or access-control system.

MANUAL · SEMI-AUTO · AUTO | FLUSH WHEN LOWERED | LED WARNING RING | STAINLESS STEEL | ✓ CUSTOMISABLE

ISOMETRIC — RAISED · RISING · LOWERED

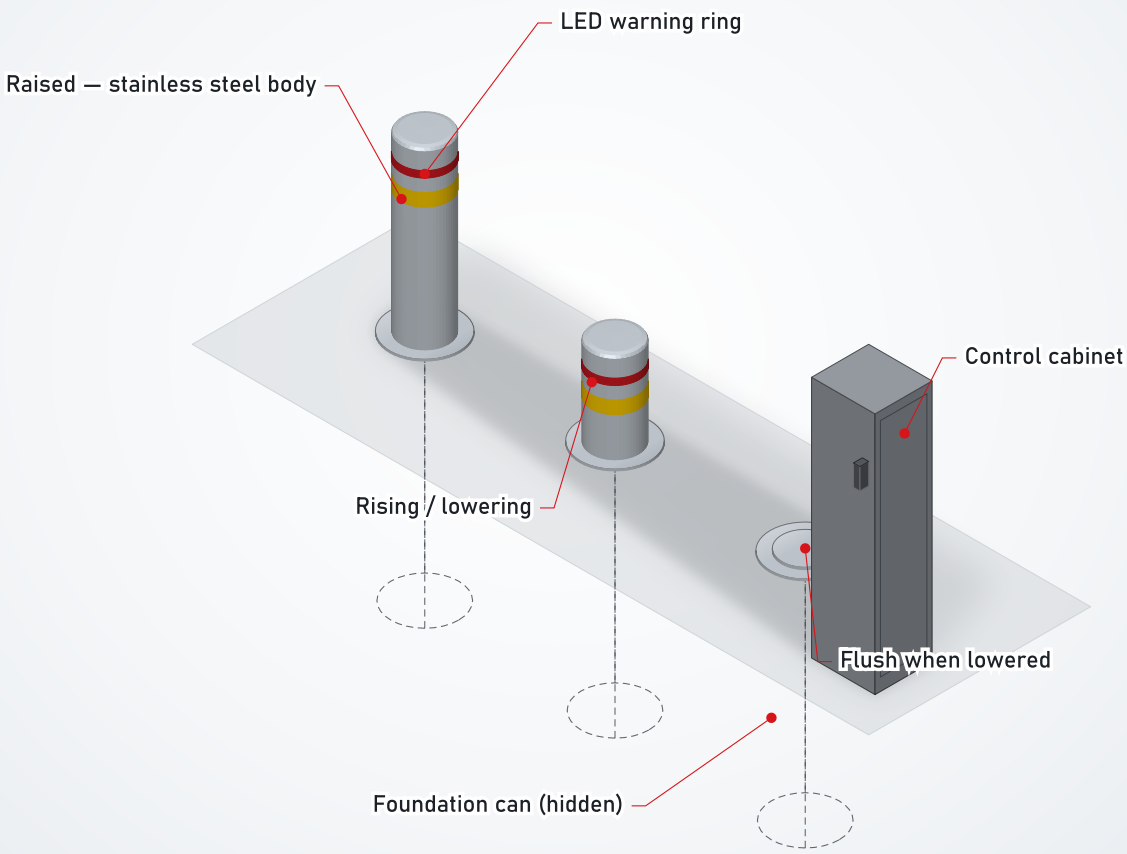

DWG	SCALE	UNITS	PROJ.	
WHIW-BA-01	NTS	mm	3RD ANGLE	A

Product code	Type	Operation	Typical use
WHIW-BA-M	Manual retractable	Lifted by hand, key-locked up or down	Occasional access, service routes
WHIW-BA-SA	Semi-automatic	Gas spring raises on key release; pushed down by hand	Frequent manual access
WHIW-BA-H	Automatic · hydraulic	Hydraulic power unit and controller	High-traffic vehicle entrances
WHIW-BA-E	Automatic · electro-mechanical	Integrated motor, no hydraulic oil	Plazas and pedestrian zones
WHIW-BA-K	Automatic · crash-rated	Hydraulic, impact-tested design	Hostile-vehicle mitigation

OPTIONS 選項

- Stainless steel or powder-coated body
- LED warning ring and reflective band
- Diameter, height and wall thickness to suit
- Drainage connection for the foundation can

CONTROL 控制

- Push button, remote, card reader or number-plate recognition
- Induction loops and safety sensors
- Traffic lights and warning signs
- Interface to building access systems

✓ CUSTOMISABLE — Made to suit your project — size · material · grade · finish · RAL colour · load class · logo / marking 可按客戶要求訂造

WAI HING IRON WORKS LTD · 偉興鐵業工程有限公司 · PROPRIETARY PRODUCTS CATALOGUE 2026

WHIW-VB SERIES · VEHICLE BARRIERS

ROAD BLOCKERS & TYRE KILLERS 防撞路障及破胎器

High-security vehicle barriers for entrances to government, utility, data-centre and commercial sites. Products are supplied with their control systems by our impact-tested manufacturing partner.

IMPACT TESTED | SHALLOW MOUNT | HYDRAULIC / ELECTRIC | CONTROL CABINET | ✓ CUSTOMISABLE

ISOMETRIC — ROAD BLOCKER + TYRE KILLER

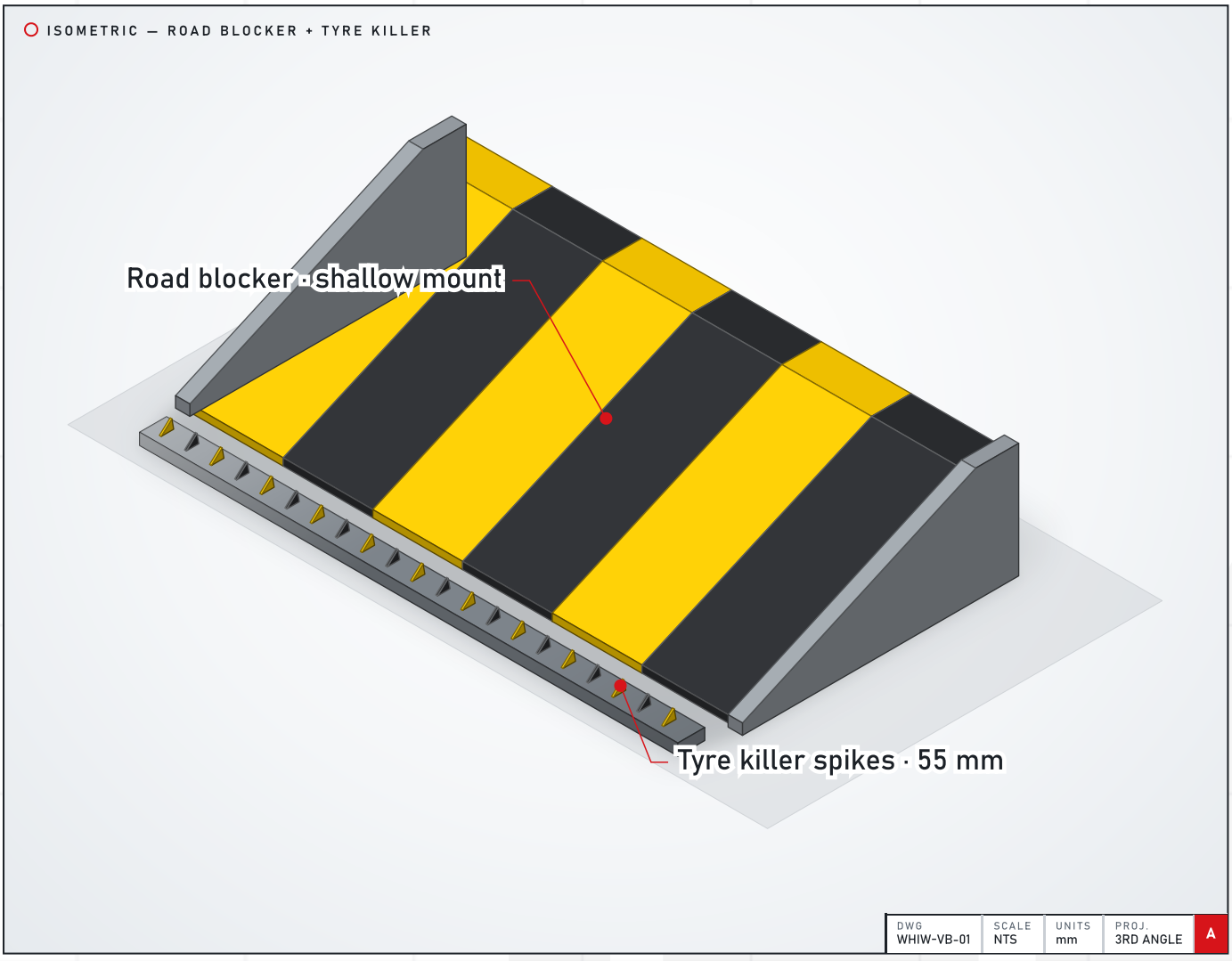

DWG	SCALE	UNITS	PROJ.	
WHIW-VB-01	NTS	mm	3RD ANGLE	A

Product	Type	Impact test	Typical use
Shallow-mounted road blocker	Rising wedge plate	IWA & PAS — 7500 kg @ 80 km/h	High-security vehicle entrances
Rising beam gate	Rising beam	IWA — 7200 kg @ 48 km/h	Controlled entrances, wide openings
Tyre killer TK103	Surface-fixed spikes	—	One-way control, car parks

TYRE KILLER TK103 破胎器

LENGTH	1000 – 8000 mm
WIDTH / HEIGHT	500 / 63 mm
SPIKE HEIGHT	55 mm
SPIKE SPACING / THICKNESS	140 / 10 mm
WEIGHT CAPACITY	≤ 100 t
CONTROLLER CABINET	466 × 380 × 708 mm

SUPPLY INCLUDES 供應範圍

- Barrier unit and foundation frame
- Hydraulic or electro-mechanical drive
- Control cabinet, push buttons, safety loops
- Warning lights and signage
- Installation and commissioning

✓ CUSTOMISABLE — Made to suit your project — size · material · grade · finish · RAL colour · load class · logo / marking 可按客戶要求訂造

WAI HING IRON WORKS LTD · 偉興鐵業工程有限公司 · PROPRIETARY PRODUCTS CATALOGUE 2026

WHIW-FB SERIES · DEMOUNTABLE

ALUMINIUM FLOOD BARRIER 鋁合金防洪擋板

Stop-log flood barrier of interlocking extruded aluminium boards with EPDM seals. Boards drop into permanent side columns and are locked with stainless steel press-down clamps — quick to deploy by hand and stored compactly when not in use.

6063-T6 / 6061-T6 | 200 mm BOARDS | EPDM SEALS | SUS304 CLAMPS | ✓ CUSTOMISABLE

ISOMETRIC — 4 BOARDS (800 mm)

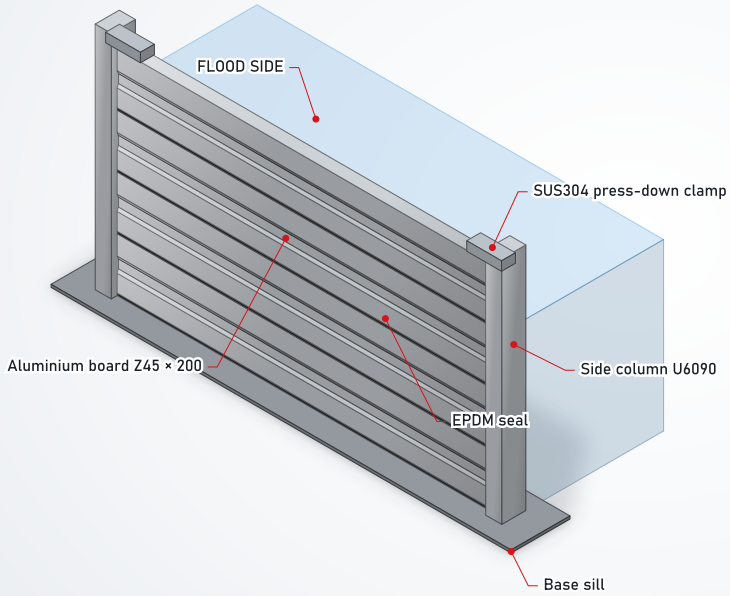

BOARD SECTION — Z45

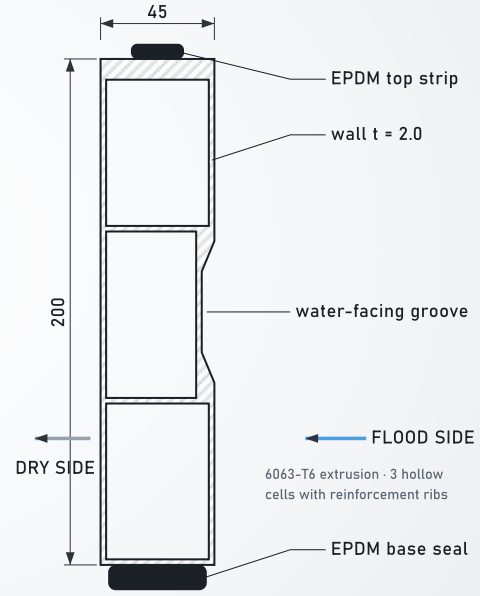

DWG	SCALE	UNITS	PROJ.	
WHIW-FB-01	NTS	mm	3RD ANGLE	A

BARRIER BOARDS 擋板

Code	Thickness	Height	Wall
Z30-2	30	200	2.0
Z45-2	45	200	2.0
Z45-3	45	200	3.0
Z60-2.5	60	200	2.5
Z80-4	80	200	4.0

CENTRE COLUMNS 中柱

Code	Section	Wall	Use
H50100	50 × 100	4	light
H70100	70 × 100	4	light
H90100	90 × 100	5	standard
H120120	120 × 120	5	heavy
H150130	150 × 130	5	heavy

SIDE COLUMNS 邊柱

Code	Section	Wall	Alloy
U5050	50 × 50	4	6061-T6
U5070	50 × 70	4	6061-T6
U6090	60 × 90	5	6061-T6
U60120	60 × 120	5	6061-T6

PRESS-DOWN CLAMPS 壓緊件

Code	t	H	W
X7 · SUS304	5	30	40
X6 · SUS304	5	30	60
X4 · SUS304	11	60	80
X2 · SUS304	8	130	100

Barrier height = number of boards × 200 mm. Centre columns are used for wide openings. Side columns with or without wings for reveal or face-fixed installation.

✓ CUSTOMISABLE — Made to suit your project — size · material · grade · finish · RAL colour · load class · logo / marking 可按客戶要求訂造

WAI HING IRON WORKS LTD · 偉興鐵業工程有限公司 · PROPRIETARY PRODUCTS CATALOGUE 2026

WHIW-EP SERIES · SITE SAFETY

EDGE PROTECTION FENCE 臨邊防護網

Welded-mesh edge protection panels with integral toe board for slab edges, lift shafts, stairwells and openings on building sites. Panels clip to round posts, are quick to install and are reused from job to job. High-visibility yellow as standard.

WELDED MESH | TOE BOARD | GALV + POWDER COAT | YELLOW / ANY RAL | ✓ CUSTOMISABLE

ISOMETRIC VIEW

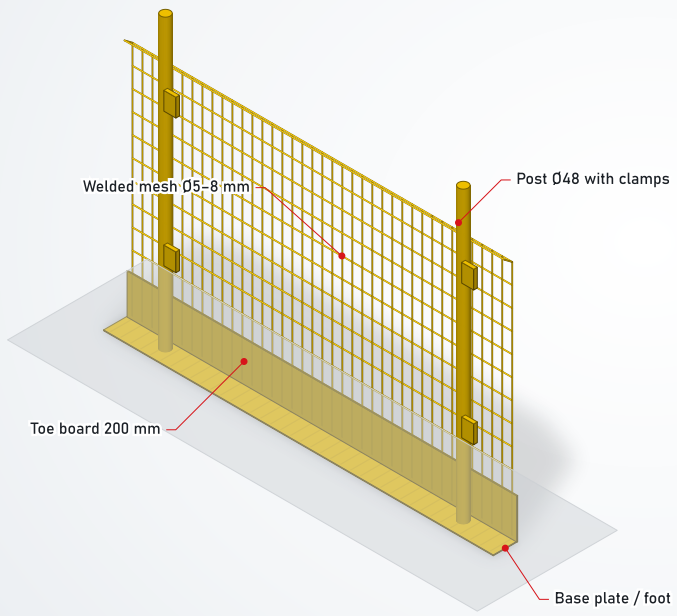


EDGE PROTECTION PANEL

DWG	SCALE	UNITS	PROJ.
WHIW-EP-01	NTS	mm	3RD ANGLE

A

SPECIFICATION 規格

WIRE DIAMETER	5 – 8 mm
MESH OPENING	50 × 100 / 50 × 200 / 50 × 250 mm
PANEL HEIGHT	1.1 – 1.5 m
PANEL LENGTH	1.3 – 3.0 m
TOE BOARD	Integral, 200 mm
POSTS	Round tube with clamp brackets
SURFACE	Galvanised + powder coated, or hot-dip galvanised

ELEVATION

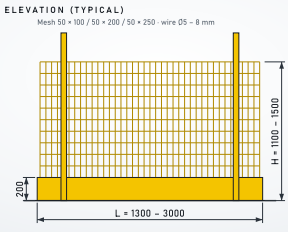


MESH + TOE BOARD DETAIL

✓ CUSTOMISABLE — Made to suit your project — size · material · grade · finish · RAL colour · load class · logo / marking 可按客戶要求訂造

WAI HING IRON WORKS LTD · 偉興鐵業工程有限公司 · PROPRIETARY PRODUCTS CATALOGUE 2026

WHIW-3D SERIES

3D WELDED MESH FENCE & GATES 3D 焊接網圍欄及閘門

Welded mesh panels with V-folds for stiffness, on square posts with fixing clips. A clean, economical perimeter for schools, parks, factories and public facilities, with matching single and double gates.

Ø4.0 – 6.0 WIRE | GALV + POWDER COAT | 7 RAL COLOURS | MATCHING GATES | ✓ CUSTOMISABLE

ISOMETRIC VIEW

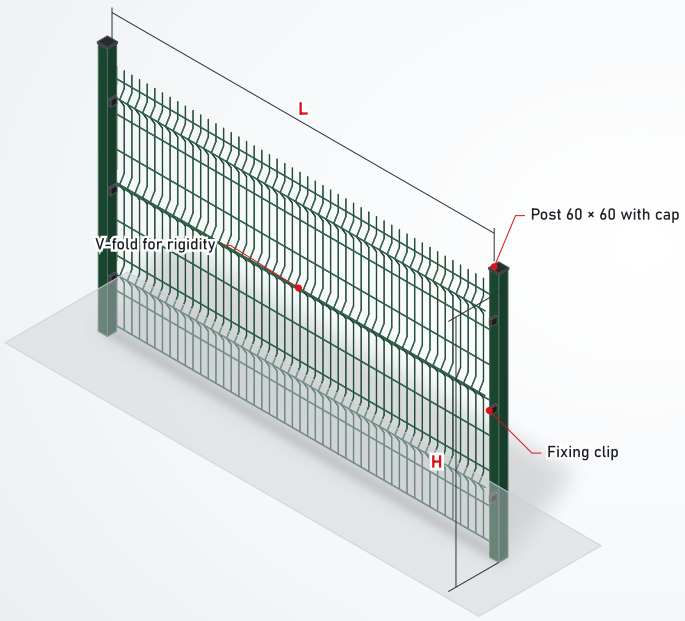


3D FENCE INSTALLED

DWG	SCALE	UNITS	PROJ.	
WHIW-3D-01	NTS	mm	3RD ANGLE	A

FENCE PANEL 圍欄網片

Height	Folds	Height	Folds
1030	2	1830	3
1230	2	2030	4
1530	3	2230	4
		2430	4

WIRE DIAMETER	4.0 / 4.5 / 5.0 / 5.5 / 6.0 mm
MESH	50 × 200, 55 × 200, 50 × 100, 75 × 150
PANEL LENGTH	2000 / 2200 / 2500 / 3000 mm
POSTS	60 × 60, 50 × 50, 40 × 60, 60 × 80 (t 1.5 / 2.0)
COLOURS	RAL 6005 · 9005 · 9010 · 7030 · 3020 · 1023 · 5017

DOUBLE GATE

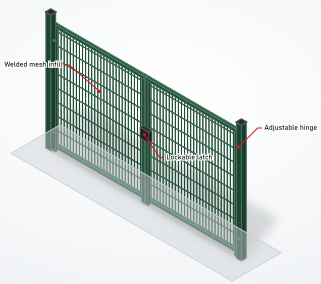

SINGLE & DOUBLE GATES 單/雙開門

FRAME	Round Ø48 × 1.8 / 2.0 or square 40 × 60 × 1.5 / 2.0
POSTS	Ø60 × 2.0, 60 × 60 × 2.0, 80 × 80 × 2.0
INFILL	Wire 3 – 5 mm, mesh 50 × 50 to 50 × 200
FINISH	Hot-dip galvanised or powder coated

✓ CUSTOMISABLE — Made to suit your project — size · material · grade · finish · RAL colour · load class · logo / marking 可按客戶要求訂造

WAI HING IRON WORKS LTD · 偉興鐵業工程有限公司 · PROPRIETARY PRODUCTS CATALOGUE 2026

WHIW-358 SERIES · HIGH SECURITY

358 ANTI-CLIMB FENCE 358 高防護圍欄

Very fine 76.2 × 12.7 mm mesh (3" × ½" — the "358") cannot be gripped by fingers or cut with hand tools easily. Used for prisons, airports, power and utility sites, data centres and border fences.

76.2 × 12.7 MESH | ANTI-CLIMB | ANTI-CUT | MATCHING GATES | ✓ CUSTOMISABLE

ISOMETRIC VIEW

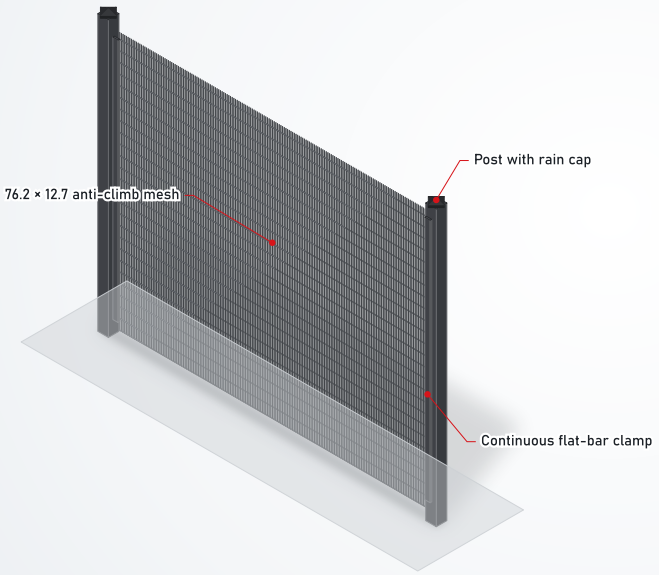


358 FENCE

DWG	SCALE	UNITS	PROJ.	
WHIW-358-01	NTS	mm	3RD ANGLE	A

PANEL 網片

OPENING	76.2 × 12.7 mm
WIRE DIAMETER	3.0 / 3.5 / 4.0 mm
WIDTH	2000 / 2200 / 2500 mm
HEIGHT	1000 – 3000 mm
SURFACE	Electro-galvanised + powder coat, or hot-dip galvanised
FIXING	Continuous flat bar or metal clips

POSTS 立柱

Post	Size	Thickness
Square	60 × 60 / 80 × 80	2.0 / 2.5 / 3.0
Rectangle	60 × 80	2.0 / 2.5 / 3.0
C-post	60 × 80	2.0 / 2.5 / 3.0
POST LENGTH	2.5 / 2.8 / 3.0 / 3.7 m (to panel height)	
RAIN CAP	Plastic or metal	

- ◇ Razor wire / barbed wire toppings
- ◇ Matching single, double and sliding gates

✓ CUSTOMISABLE — Made to suit your project — size · material · grade · finish · RAL colour · load class · logo / marking 可按客戶要求訂造

WAI HING IRON WORKS LTD · 偉興鐵業工程有限公司 · PROPRIETARY PRODUCTS CATALOGUE 2026

WHIW-TF · WHIW-CB SERIES

TEMPORARY FENCE & CROWD BARRIERS 臨時圍欄及人流控制欄

Free-standing fence panels for construction sites, events and emergency works, and interlocking crowd-control barriers for queues, events and public order. Hot-dip galvanised for long, rust-free reuse.

FREE-STANDING | HOT-DIP GALVANISED | AU / CA / US TYPES | INTERLOCKING | ✓ CUSTOMISABLE

TEMPORARY FENCE

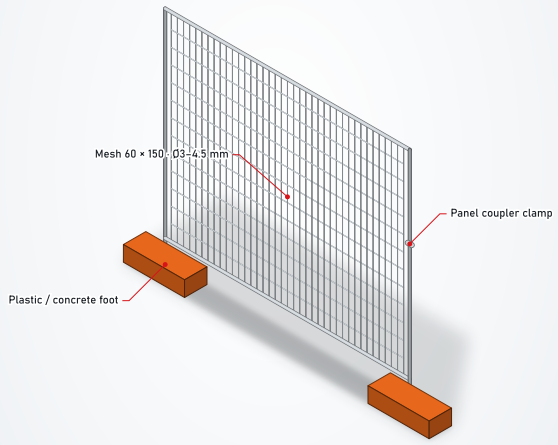

DWG	SCALE	UNITS	PROJ.	
WHIW-TF-01	NTS	mm	3RD ANGLE	A

CROWD CONTROL BARRIER

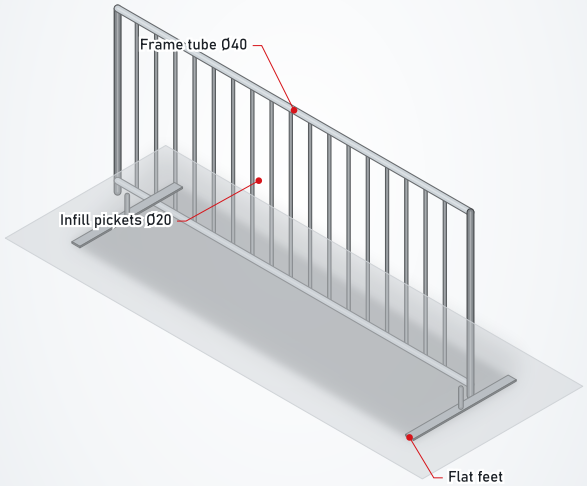

DWG	SCALE	UNITS	PROJ.	
WHIW-CB-01	NTS	mm	3RD ANGLE	A

TEMPORARY FENCE 臨時圍欄

PANEL SIZE	2.1 × 2.4 m, 1.8 × 2.4 m, 2.1 × 2.9 m
WIRE DIAMETER	3.2 / 3.5 / 4.0 / 4.5 mm
MESH	60 × 150, 75 × 75, 75 × 100, 50 × 100
FRAME TUBE	Ø32 / 38 / 40 / 42 / 48 mm
FEET	600 × 220 × 150 or 580 × 245 × 130 mm
FINISH	Hot-dip or electro-galvanised
PARTS	Panel, frame, feet, clamps, stays

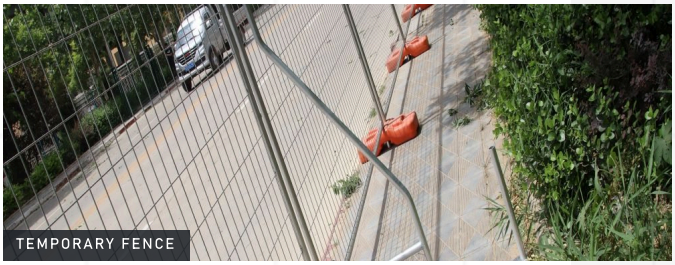
TEMPORARY FENCE

CROWD CONTROL BARRIER 人流控制欄

PANEL SIZE	914 × 2440, 1090 × 2000, 1090 × 2010, 940 × 2500
FRAME	Ø20 / 25 / 32 / 40 / 42 / 48 OD
INFILL PICKETS	Ø12 / 14 / 16 / 20 OD
PICKET SPACING	100 / 120 / 190 / 200 mm
FINISH	Hot-dip galvanised or powder coated
FEET	Flat, bridge or tube feet


CROWD CONTROL BARRIER

✓ CUSTOMISABLE — Made to suit your project — size · material · grade · finish · RAL colour · load class · logo / marking 可按客戶要求訂造

WAI HING IRON WORKS LTD · 偉興鐵業工程有限公司 · PROPRIETARY PRODUCTS CATALOGUE 2026

WHIW-F SERIES

PERIMETER FENCING 周界圍欄

Further fence systems for residential, commercial, sports and industrial boundaries — all supplied with posts, fittings and gates to match, and installed by our own teams if required.

GALVANISED | POWDER COATED | PVC COATED | POSTS & FITTINGS | ✓ CUSTOMISABLE

STEEL TUBULAR FENCE 鋼管圍欄



WIDTH × HEIGHT	5 – 10 ft × 4 – 8 ft
RAILS	1" / 1.57" / 1.77" square
PICKETS	0.63" / 0.75" square @ 4" / 5"
POSTS	2" / 2.36" / 3.15" square
FINISH	Galvanised + powder coat · black or any colour

CHAIN LINK FENCE 勾花網圍欄

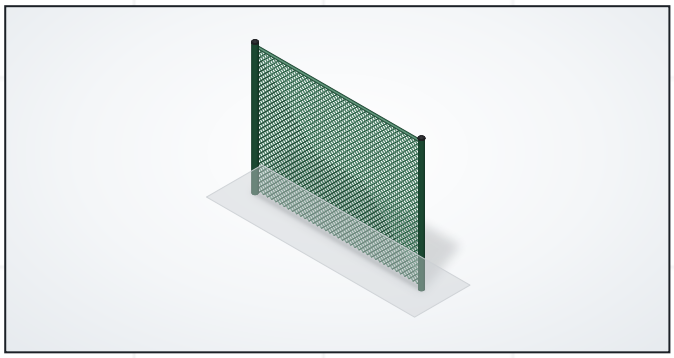

WIRE	1.0 – 6.0 mm · galvanised, PVC or Galfan
MESH OPENING	20 × 20 to 100 × 100 mm
HEIGHT / ROLL LENGTH	0.5 – 3 m / 4 – 50 m
POSTS & RAILS	Ø32 – 89 mm, t 1.5 – 5.0 mm
FINISH	PVC coated, galvanised, hot-dip

DOUBLE-WIRE FENCE 雙絲網圍欄


DOUBLE-WIRE FENCE

CONSTRUCTION	Twin 8 mm horizontal + 6 mm vertical wires (8/6/8)
USE	Schools, sports grounds, industrial sites
FINISH	Galvanised + powder coated

ROLL-TOP FENCE 卷頂圍欄


ROLL-TOP FENCE

HEIGHTS	900 / 1200 / 1500 / 1800 mm (others on request)
PANEL WIDTH	3000 mm
MESH / WIRE	150 × 50 mm · Ø4 / 5 / 6 mm
EDGES	Rolled top and bottom — no sharp wire ends

✓ CUSTOMISABLE Made to suit your project — size · material · grade · finish · RAL colour · load class · logo / marking 可按客戶要求訂造

WAI HING IRON WORKS LTD · 偉興鐵業工程有限公司 · PROPRIETARY PRODUCTS CATALOGUE 2026

WHIW-WS · WHIW-CG SERIES

WHEEL STOPPERS & CORNER GUARDS 橡膠防撞膠 / 泊車擋及防撞護角

Rubber car-park products that protect vehicles, columns and walls. Wheel stoppers are bolted down with anchors; corner guards are screwed to columns and corners, with high-visibility yellow reflective tape.

RUBBER | YELLOW REFLECTIVE | ANCHOR BOLTED | ANTI-UV | ✓ CUSTOMISABLE

WHEEL STOPPERS — TYPE A & B

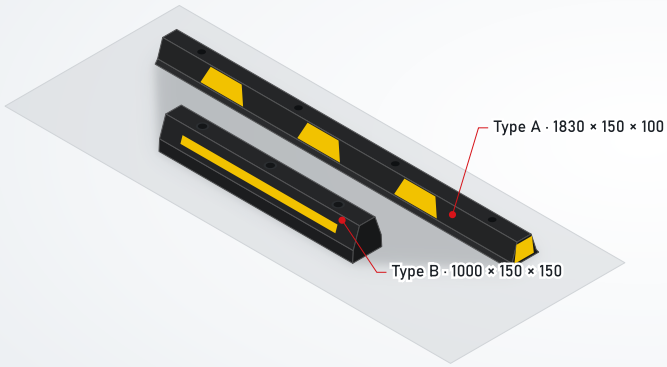

SECTION — TYPE B

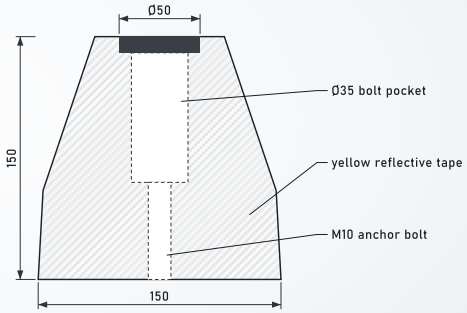

DWG	SCALE	UNITS	PROJ.
WHIW-WS-01	NTS	mm	3RD ANGLE

A

WHEEL STOPPER TYPE A 擋輪 A

SIZE	1830 L × 150 W × 100 H mm
MATERIAL	Recycled rubber, black with yellow tape
WEIGHT	15 kg
FIXING	4 × M10 × 90 bolts + Hilti HKD M10 × 40 anchors
WORKING TEMPERATURE	−20 °C to 75 °C

WHEEL STOPPER TYPE B 擋輪 B

SIZE	1000 L × 150 W × 150 H mm
FIXING	3 × M10 × 75 bolts in Ø35 pockets + HKD M10 × 40 anchors
CAPS	Ø50 rubber caps
TAPE	800 mm yellow reflective tape

RUBBER CORNER GUARD — HCG-100

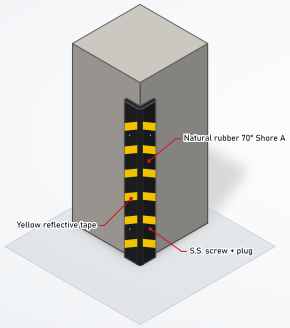

PLAN SECTION — HCG-100

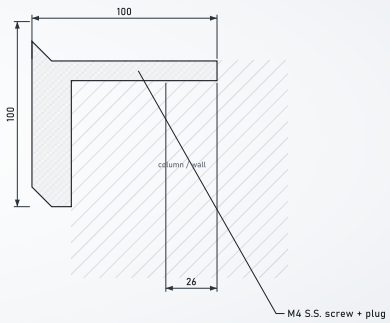

DWG	SCALE	UNITS	PROJ.
WHIW-CG-01	NTS	mm	3RD ANGLE

A

CORNER GUARD HCG-100	100 × 100 mm legs · natural rubber, hardness 70° Shore A · #6 × 30 mm S.S. screws with plugs · yellow reflective tape · any length

✓ CUSTOMISABLE — Made to suit your project — size · material · grade · finish · RAL colour · load class · logo / marking 可按客戶要求訂造

WAI HING IRON WORKS LTD · 偉興鐵業工程有限公司 · PROPRIETARY PRODUCTS CATALOGUE 2026

WHIW-PD SERIES

ADJUSTABLE PAVER PEDESTALS 可調節支撐器

Polypropylene pedestals for raised terraces, roof decks, podiums and water features. Tiles, pavers, timber or WPC decking and grating panels sit on a self-levelling head, giving a level, free-draining surface over sloping slabs and membranes.

POLYPROPYLENE | 12.5 – 1460 mm | SLOPE CORRECTION | SPACER TABS | ✓ CUSTOMISABLE

ISOMETRIC VIEW

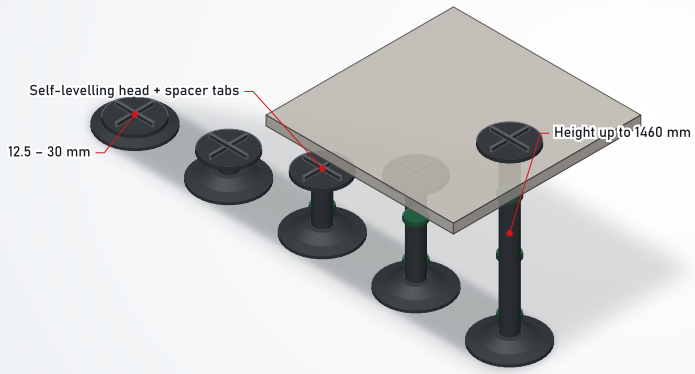

ELEVATION — MB-T1

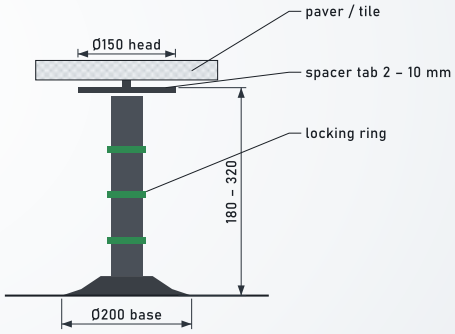

DWG	SCALE	UNITS	PROJ.	
WHIW-PD-01	NTS	mm	3RD ANGLE	A

HEIGHT RANGE 高度範圍

Code	Height mm	Code	Height mm
WHIW-PD-FP	12.5	WHIW-PD-HT1	250 – 370
WHIW-PD-T0	14 – 19	WHIW-PD-HT2	370 – 550
WHIW-PD-T0A	19 – 30	WHIW-PD-HT3	550 – 750
WHIW-PD-T0B	28 – 42	WHIW-PD-HT4	600 – 930
WHIW-PD-T0C	40 – 65	WHIW-PD-HT5	750 – 1100
WHIW-PD-T0D	60 – 105	WHIW-PD-HT6	900 – 1280
WHIW-PD-T0E	90 – 180	WHIW-PD-HT7	1050 – 1460
WHIW-PD-T1	180 – 320		





APPLICATIONS

SPECIFICATION — WHIW-PD-T0E 技術數據

HEAD	Ø150 mm (176 cm²) with swivel spacer tabs
BASE	Ø200 mm (315 cm²) with drainage holes
SPACER TABS	2 / 3.5 / 5 / 8 / 10 mm
SLOPE CORRECTOR	0 – 5 %
MATERIAL	PP, 90 % polypropylene + 10 % talc, UV stabilised
WALL THICKNESS	4.5 – 6 mm
TEMPERATURE	−40 °C to 120 °C

- ≤ 400 mm free-standing; > 400 mm fixed with screws or glue
- Rubber shims absorb impact and sound

✓ CUSTOMISABLE — Made to suit your project — size · material · grade · finish · RAL colour · load class · logo / marking — 可按客戶要求訂造

WAI HING IRON WORKS LTD · 偉興鐵業工程有限公司 · PROPRIETARY PRODUCTS CATALOGUE 2026

WHIW-RF SERIES · OA60

RAISED ACCESS FLOOR 高架活動地板

All-steel cementitious raised floor panels for offices, data centres, control rooms and plant rooms. The void below carries cabling and air distribution; any panel can be lifted for access. Panels sit on adjustable steel pedestals with corner-lock or bolted stringers.

ALL-STEEL PANEL | 600 × 600 × 33 | 7 LOAD GRADES | HPL / PVC / CARPET FINISH | ✓ CUSTOMISABLE

ISOMETRIC VIEW

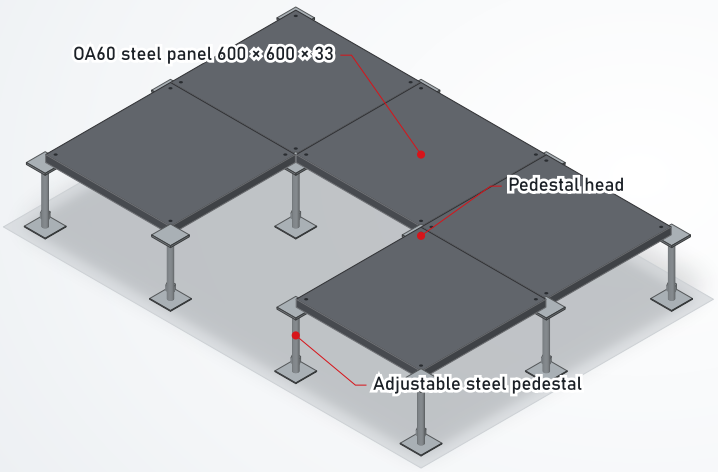

SECTION (TYPICAL)

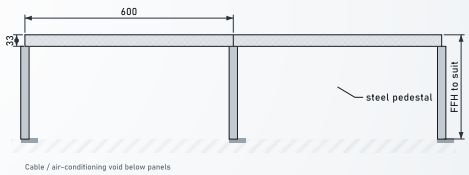

DWG	SCALE	UNITS	PROJ.	
WHIW-RF-01	NTS	mm	3RD ANGLE	A

LOAD PERFORMANCE 承載性能

Grade	Size mm	Concentrated N	Impact N	Ultimate N	Uniform N/m²	Rolling 10 passes N	Rolling 10 000 passes N
WHIW-RF-SC668	600 × 600 × 33	≥ 2990	670	≥ 8890	≥ 12500	2215	1548
WHIW-RF-SC800	600 × 600 × 33	≥ 3596	670	≥ 10799	≥ 19796	2959	2215
WHIW-RF-SC1000	600 × 600 × 33	≥ 4498	670	≥ 13494	≥ 23294	3596	2959
WHIW-RF-SC1250	600 × 600 × 33	≥ 5595	670	≥ 16797	≥ 33084	4498	3596
WHIW-RF-SC1500	600 × 600 × 33	≥ 6693	670	≥ 20090	≥ 42581	5595	4498
WHIW-RF-SC2000	600 × 600 × 33	≥ 8898	670	≥ 26685	≥ 49784	6693	5595
WHIW-RF-SC2500	600 × 600 × 33	≥ 11093	670	≥ 33290	≥ 58280	8898	6693

Tested to the CISCA method. 610 × 610 × 33 panels also available.

CONSTRUCTION 結構

TOP SHEET	SPCC cold-rolled steel
BOTTOM SHEET	ST14 deep-drawn steel with embossed domes
CORE	Lightweight foamed cement
FINISH	Epoxy powder coat; HPL, PVC, ceramic or carpet tiles

OPTIONS 選項

- ◇ Corner-lock or bolted-stringer understructure
- ◇ Perforated airflow panels and grilles
- ◇ Cable outlets, trunking panels and lifters
- ◇ Finished floor height to suit

✓ CUSTOMISABLE — Made to suit your project — size · material · grade · finish · RAL colour · load class · logo / marking 可按客戶要求訂造

WAI HING IRON WORKS LTD · 偉興鐵業工程有限公司 · PROPRIETARY PRODUCTS CATALOGUE 2026

WHIW-LE · WHIW-GW SERIES

LANDSCAPE EDGING & GREEN WALLS 園林收邊及不銹鋼綠化網

Steel, stainless and plastic edging gives crisp lines between paving, gravel, lawn and planting. Stainless rope-mesh and cable systems support climbing plants on façades, columns and car-park screens.

CORTEN / GALV / STAINLESS | SS316 ROPE MESH | CURVES ON SITE | MADE TO SIZE | ✓ CUSTOMISABLE

LANDSCAPE EDGING

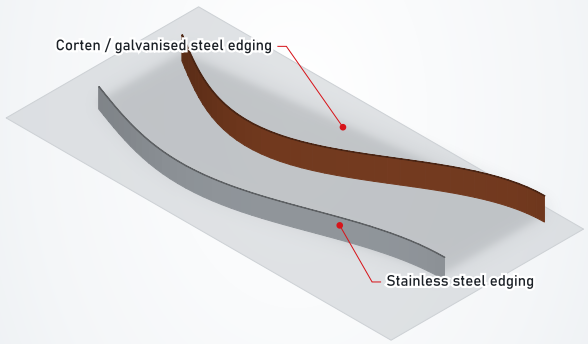

DWG	SCALE	UNITS	PROJ.	
WHIW-LE-01	NTS	mm	3RD ANGLE	A

GREEN-WALL ROPE MESH

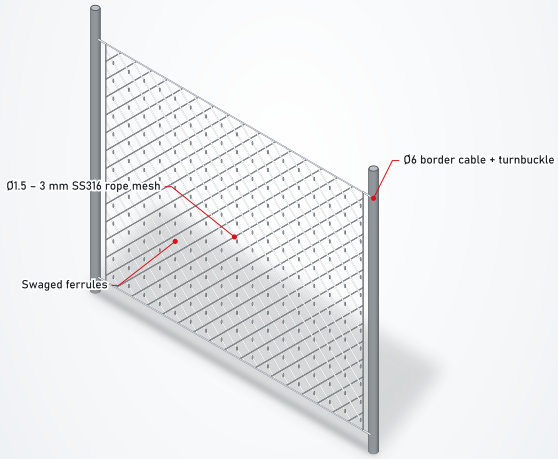

DWG	SCALE	UNITS	PROJ.	
WHIW-GW-01	NTS	mm	3RD ANGLE	A

LANDSCAPE EDGING 園林收邊


STEEL


STAINLESS / CORTEN


PLASTIC


MULTI-FUNCTION

- Bends to curves on site
- Stakes and joiners supplied
- Heights and gauges to order

GREEN-WALL ROPE MESH 不銹鋼綠化網


SS316 ROPE MESH

MATERIAL	SS316 stainless steel
NET	1 – 3 mm rope, opening 20 – 80 mm (diamond)
BORDER CABLE	Ø6 mm wire rope
FITTINGS	Threaded studs, eye turnbuckles, spacers 100 mm (custom), screws, anchors

✓ CUSTOMISABLE — Made to suit your project — size · material · grade · finish · RAL colour · load class · logo / marking 可按客戶要求訂造

WAI HING IRON WORKS LTD · 偉興鐵業工程有限公司 · PROPRIETARY PRODUCTS CATALOGUE 2026

WHIW-HR · WHIW-SL SERIES

HANDRAILS & SLIDING DOORS 防撞扶手及鋁質趟門

Building products supplied alongside our metalwork: impact-resistant corridor handrails for hospitals, elderly homes and schools, and slim-frame aluminium glass sliding doors and windows for interiors and façades.

ALUMINIUM CORE | VINYL COVER | TEMPERED GLASS | ANY COLOUR | ✓ CUSTOMISABLE

CORRIDOR HANDRAIL ZXY-152H

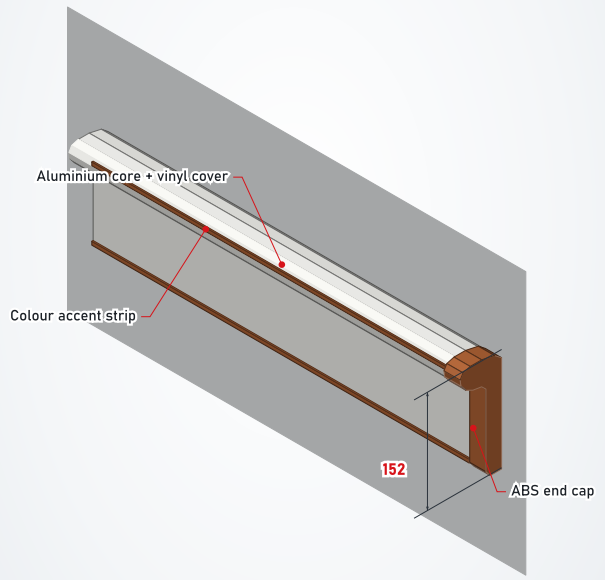

DWG	SCALE	UNITS	PROJ.	
WHIW-HR-01	NTS	mm	3RD ANGLE	A

ALUMINIUM SLIDING DOOR

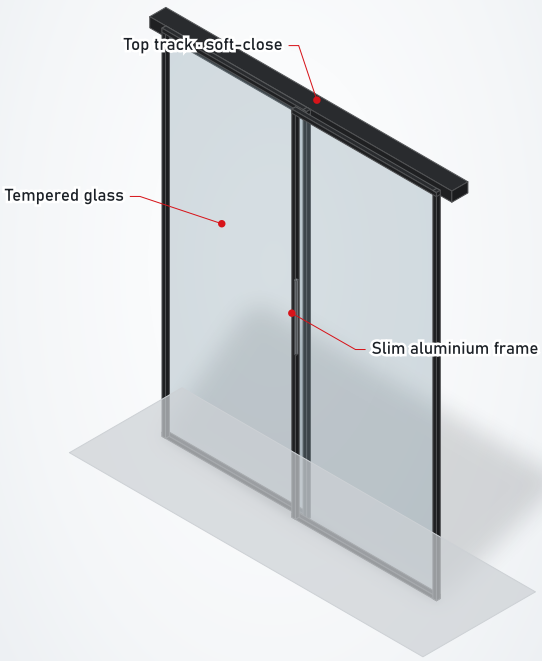

DWG	SCALE	UNITS	PROJ.	
WHIW-SL-01	NTS	mm	3RD ANGLE	A

CORRIDOR HANDRAIL 防撞扶手



HANDRAIL WITH ACCENT STRIP

MODEL	WHIW-HR-152
CONSTRUCTION	Aluminium core + vinyl cover + ABS elbows / end caps
ALUMINIUM THICKNESS	1.8 mm
SIZE	4000 × 152 mm
COLOURS	Multiple — accent strip to suit interior

SLIDING DOORS & WINDOWS 趟門及窗

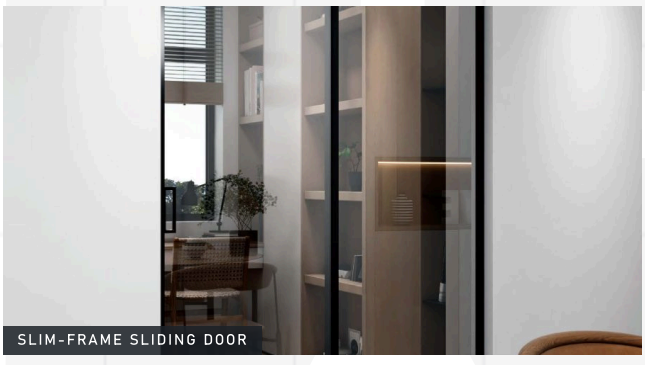

SLIM-FRAME SLIDING DOOR

- Single, double and multi-leaf systems
- Top-hung tracks with soft-close
- Clear, frosted or laminated tempered glass
- Aluminium windows to project specification

✓ CUSTOMISABLE — Made to suit your project — size · material · grade · finish · RAL colour · load class · logo / marking 可按客戶要求訂造

WAI HING IRON WORKS LTD · 偉興鐵業工程有限公司 · PROPRIETARY PRODUCTS CATALOGUE 2026

APPENDIX

HOW TO ORDER 訂購流程

Every product in this catalogue can be supplied in the standard sizes shown or made to your specification. Send us your enquiry — our team will confirm the product, prepare shop drawings and submissions, and deliver or install on site.

01
ENQUIRY
Send drawings, opening sizes, quantities and site location.

02
PROPOSAL
We confirm product, load class, material and finish, with a quotation.

03
SUBMISSION
Shop drawings and material submission for your approval.

04
DELIVERY
Manufacture, delivery and installation by our own site teams.

WHAT TO SEND US 查詢資料

- Product family and page number from this catalogue
- Clear opening or overall size, and quantity
- Load class / duty and location of use
- Material and finish — galvanised, stainless, RAL colour
- Logo, marking or special requirements
- Delivery address and programme

MADE TO YOUR SPECIFICATION 按客戶要求訂造

1. **SIZE & SHAPE**
   Any length, width, opening or radius — curved and special shapes.
2. **MATERIAL & FINISH**
   Iron, carbon steel, stainless, aluminium — galvanised, powder coat in any RAL.
3. **LOAD CLASS**
   EN 124 A15 – F900 or your project loading.
4. **BRANDING**
   Your logo, project name or utility marking — cast or etched.

OUR RANGE AT A GLANCE 產品系列

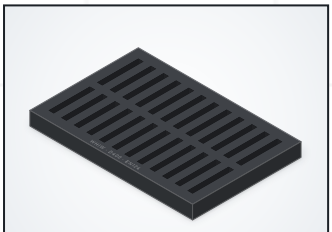
01 · GULLY GRATING p.04


01 · MANHOLE COVER p.09

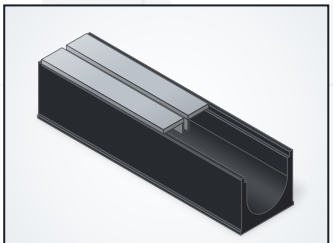
02 · SLOT DRAIN p.13

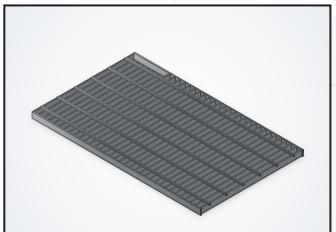
03 · BAR GRATING p.15

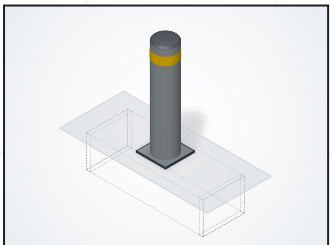
04 · BOLLARD p.19

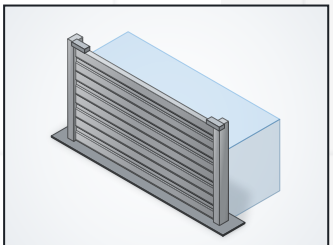
05 · FLOOD BARRIER p.23

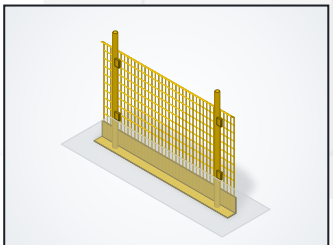
06 · EDGE PROTECTION p.24

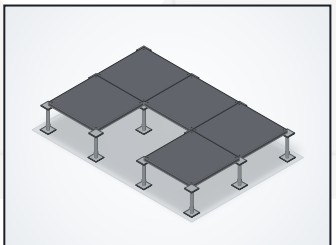
08 · RAISED FLOOR p.31

TELEPHONE
(852) 2304 1938

FAX
(852) 2304 1928

EMAIL
enquiry@whiw.com.hk

WAI HING IRON WORKS LTD · 偉興鐵業工程有限公司 · PROPRIETARY PRODUCTS CATALOGUE 2026

偉興鐵業工程有限公司

WAI HING IRON WORKS LTD

Standard ranges.
Made to your specification.

Drainage · gratings · manhole covers · bollards & vehicle barriers · flood barriers · fencing & site safety · car-park products · architectural & building products — supplied, fabricated and installed in Hong Kong.

TELEPHONE
(852) 2304 1938

FAX
(852) 2304 1928

EMAIL
enquiry@whiw.com.hk